ENGINEERING BUILDING TI
TOWN OF LOS GATOS

41 MILES AVENUE
LOS GATOS CA 95030

LOCATION MAP

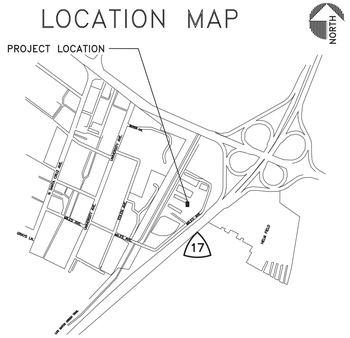

VICINITY MAP

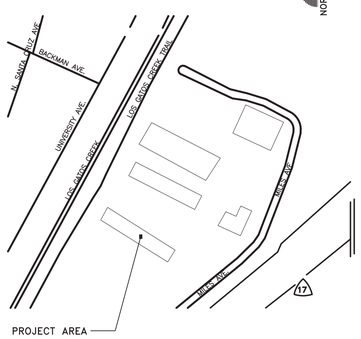

KEY PLAN

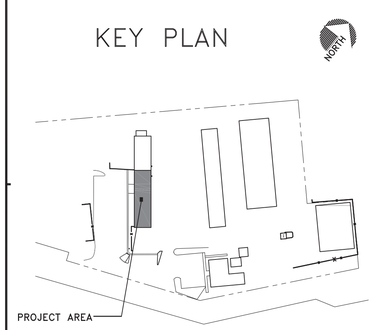

PROJECT SUMMARY

THE PROJECT'S SCOPE OF WORK IS THE TENANT IMPROVEMENT OF THE TOWN'S EXISTING ENGINEERING BUILDING ~~AND THE REPLACEMENT OF THE (E) STORAGE BUILDING THAT HOUSES THE MAINTENANCE FIELD CREW AND STORAGE.~~

THE ENGINEERING BUILDING TENANT IMPROVEMENTS COMPRISES STAFF CUBICLES, OFFICE SPACES, CONFERENCE ROOMS, TRAFFIC SIGNAL CONTROL ROOM, RESTROOM FACILITIES, KITCHENETTE, AND CUSTODIAL STORAGE. IT ALSO INVOLVES HVAC, ELECTRICAL, PLUMBING, AND CIVIL UPGRADES AS WELL AS IT DISTRIBUTION.

~~THE (E) STORAGE BUILDING REPLACEMENT INCLUDES REMOVAL OF THE EXISTING BUILDING AND PLACEMENT OF A NEW, PRE FABRICATED STEEL STORAGE BUILDING SET ON A CONCRETE PAD FOR STORAGE AREAS AND SHELVING.~~

DESIGN TEAM

ARCHITECT
CUSCHIERI HORTON ARCHITECTS
1475 S. BASCOM AVE., STE. 204
CAMPBELL, CA 95008
408.371.8200
CONTACT: DAN CUSCHIERI, ARCHITECT
Dan@charch.com

STRUCTURAL
BASE DESIGN
582 MARKET ST. STE 1402
SAN FRANCISCO, CA 94104
415.466.2997
CONTACT: KATY BRIGGS, S.E.
Katy@BASEdesigninc.com

CIVIL
SANDIS
1700 WINCHESTER BOULEVARD
CAMPBELL, CA 95008
408.636.0900
CONTACT: STEPHEN YAZALINA
syaz@sandis.net

MECHANICAL
ACIES ENGINEERING
3371 OLCOTT ST.
SANTA CLARA, CA 95054
408.522.5255
CONTACT: NOEL SUMALPONG
noel@acies.net

ELECTRICAL
ACIES ENGINEERING
3371 OLCOTT ST.
SANTA CLARA, CA 95054
408.522.5255
CONTACT: TOMISLAC GAJIC
tomislav@acies>net

PLUMBING & MECHANICAL
ACIES ENGINEERING
3371 OLCOTT ST.
SANTA CLARA, CA 95054
408.522.5255
CONTACT: NAZAR MISHCHUK
nazar@acies.net

CODE SUMMARY

EXISTING BUILDING:
CONSTRUCTION TYPE:
ENGINEERING BLDG. – TYPE IIIB
OF STORIES: 1
NEW ACCESSORY BUILDING
FIRE SPRINKLERS: NO
PROPOSED TENANT SPACE: 2,781 GROSS SQ. FT.
(2,642 NET SQ. FT.)

OCCUPANCY: B

~~NEW BUILDING~~
~~POLICE EVIDENCE STORAGE BLDG. – TYPE IIIB (PRE FAB)~~
~~# OF STORIES: 1~~
~~FIRE SPRINKLERS: NO~~
~~PROPOSED STORAGE SPACE: 1,900 SQ. FT.~~

~~OCCUPANCY: S-1~~

ZONE: R-M:5-12 LPH – MULTI-FAMILY RESIDENTIAL
APN #: 529-05-049

PLUMBING LOAD CALCULATIONS

2016 CALIFORNIA PLUMBING CODE – TABLE A

OCCUPANT GROUP	SQ.FT.	LOAD FACTOR	OCCUPANTS
B	2642.97	200	14
S-1	4800	5000	1

TOTAL OCCUPANTS = 15

TABLE 422.1 : MINIMUM PLUMBING FACILITIES
(PER CALCULATED OCCUPANT LOAD)

BUILDING OCCUPANCY 'B':	WATER CLOSETS (FIXTURES PER PERSON)[3]		URINALS (FIXTURES PER PERSON)	LAVATORIES (FIXTURES PER PERSON)		DRINKING FOUNTAINS	
	REQD.	PROVIDED	REQD.	REQD.	PROVIDED	REQD.	PROVIDED
MALE	1	1	1	1	1	1	1 WATER STATION
FEMALE	1	1		1	1		

APPLICABLE BUILDING CODES:

ARCHITECTURAL / STRUCTURAL

2016 CALIFORNIA ADMINISTRATIVE CODE (CAC)
PART 1, TITLE 24,
CALIFORNIA CODE OF REGULATIONS (CCR)

2016 CALIFORNIA BUILDING CODE (CBC)
PART 2, TITLE 24, CCR

ELECTRICAL

2016 CALIFORNIA ELECTRICAL CODE (CEC)
PART 3, TITLE 24, CCR

MECHANICAL

2016 CALIFORNIA MECHANICAL CODE (CMC)
PART 4, TITLE 24, CCR

PLUMBING

2016 CALIFORNIA PLUMBING CODE (CPC)
PART 5, TITLE 24, CCR

FIRE PROTECTION

2016 CALIFORNIA FIRE CODE (CFC)
PART 9, TITLE 24, CCR

NATIONAL FIRE PROTECTION
ASSOCIATION STANDARDS (NFPA)

2016 NFPA 10 STANDARD FOR PORTABLE FIRE EXTINGUISHERS

2016 NFPA 72 NATIONAL FIRE ALARM CODE WITH SFM AMENDMENTS

2016 NFPA 101 LIFE SAFETY CODE

NOTE:
THE CONTRACTOR IS REQUIRED TO COMPLY WITH THE ABOVE CODES AND REGULATIONS AND ALL OTHER APPLICABLE CODES OR ZONING REQUIREMENTS. ADVISE ARCHITECT OF ANY NON-COMPLIANCE IN THE CONSTRUCTION DOCUMENTS PRIOR TO PROCEEDING WITH THE CONSTRUCTION.

TOWN OF LOS GATOS
20% RULE: ACCESSIBILITY FOR EXISTING BUILDINGS
2016 CBC SEC 11B-202.4 EX #8

Address: 41 Miles Ave, Los Gatos, CA 95030 Permit Number: _____

1. 20% Rule applies to a valuation threshold under $166,157.00 (revised 01/19)
   - ☐ Actual work of project shall comply with full accessibility
   - ☐ Full compliance creates unreasonable hardship, will apply for unreasonable hardship
   - ☐ Will provide a maximum amount of 20% of cost of construction for the following prioritized accessibility features in the following order:
     a. accessible entrance
     b. accessible route to altered area (including parking and path of travel from public sidewalk)
     c. accessible restrooms
     d. accessible telephones
     e. accessible drinking fountains
     f. additional accessible elements such as parking, storage and alarms
2. Valuation threshold over $166,157.00 (revised 01/19)
   - ☐ Plans show full accessibility compliance

****

A. Cost of proposed project $ 1,287,426
B. Total amount spent on other projects at this tenant space within the past 3 years $ -
C. Total Cost (Line A + Line B) $ 1,287,426
D. If (Line C) is over $166,157.00 then full accessibility is required.
E. If (Line C) is less than the valuation threshold of $166,157.00, then 20% of Line A is the **minimum** amount required to be spent for accessibility compliance. (Line A) x 20% = $ _____

20% Upgrade Expenditures (detailed cost of construction)
1. _____ $ _____
2. _____ $ _____
3. _____ $ _____
4. _____ $ _____

Total Expenditure Greater or Equal to (Line E) $ _____

Projects limited to heating, ventilation, air conditioning, re-roofing and cosmetic work that does not affect items regulated by code (i.e. painting) are exempt from accessibility upgrades.

N:/DEV/FORMS/Building/20%Rule Rev 5/14/2019

Town of Los Gatos • Community Development • Building Division • 110 E. Main St., Los Gatos, CA 95031
408.354.6876 • www.losgatosca.gov • www.facebook.com/losgatosca

GENERAL NOTES

PRE-BID SITE VISIT

CONTRACTOR SHALL, AS A CONDITION OF AN ACCEPTABLE BID, VISIT THE PROJECT AREA IN ORDER TO FAMILIARIZE HIMSELF WITH EXISTING CONDITIONS AND THE REQUIREMENTS OF THE PROJECT. CONTRACTOR MAY CONTACT THE ARCHITECT DURING THE BIDDING PHASE REGARDING CLARIFICATIONS AND PROJECT REQUIREMENTS.

IN ACCORDANCE WITH GENERALLY ACCEPTED CONSTRUCTION PRACTICES, THE CONTRACTOR WILL BE SOLELY AND COMPLETELY RESPONSIBLE FOR CONDITIONS OF THE JOB SITE INCLUDING SAFETY OF ALL PERSONS AND PROPERTY DURING PERFORMANCE OF THE WORK. THIS REQUIREMENT WILL APPLY CONTINUOUSLY AND NOT BE LIMITED TO NORMAL WORKING HOURS.

SAFETY
DAMAGE TO STRUCTURE OR SYSTEMS TO REMAIN

CONTRACTOR SHALL REIMBURSE OWNER FOR REPAIR AND REPLACEMENT, TOGETHER WITH ARCHITECT'S FEES, FOR ANY DAMAGE CAUSED TO STRUCTURES OR EXISTING SYSTEMS TO REMAIN, AS THE RESULT OF HIS CONSTRUCTION OPERATIONS.

EXISTING CONDITIONS

ALL INFORMATION RELATING TO EXISTING CONSTRUCTION IS GIVEN AS BEING THE BEST INFORMATION AVAILABLE, BUT WITHOUT GUARANTEE OF ACCURACY. THE CONTRACTOR SHALL VERIFY ALL EXISTING CONDITIONS, DIMENSIONS, AND BUILDING DATA AT THE JOB SITE. ANY DISCREPANCIES REQUIRING MODIFICATION TO THE CONSTRUCTION DOCUMENTS SHALL BE REPORTED TO THE ARCHITECT IMMEDIATELY. NO MODIFICATIONS SHALL BE MADE BY THE CONTRACTOR WITHOUT APPROVAL FROM THE ARCHITECT.

CONTRACTOR'S EQUIPMENT

COORDINATE WITH OWNER'S REPRESENTATIVE, THE LOCATION OF CONTRACTOR'S BUILDING ENTRANCE AND LOCATION OF CONTRACTOR'S EQUIPMENT AND MATERIAL STORAGE AREA.

UTILITY SHUTDOWNS AND CONNECTIONS

A MINIMUM 48 HOUR NOTICE SHALL BE GIVEN TO THE OWNER, BEFORE ANY SHUTDOWN OR TYING INTO ANY UTILITY, TO OBTAIN APPROPRIATE APPROVALS FROM THE OWNER'S REPRESENTATIVES.

TITLE 24 COMPLIANCE

THE INTENT OF THE DRAWINGS AND SPECIFICATIONS IS TO COMPLY WITH THE CALIFORNIA BUILDING STANDARDS CODE, TITLES 19, 22, 24, CALIFORNIA CODE OF REGULATIONS. SHOULD ANY CONDITIONS DEVELOP NOT COVERED BY THE CONTRACT DOCUMENTS WHEREIN THE FINISHED WORK WILL NOT COMPLY WITH SAID CALIFORNIA CODE OF REGULATIONS, C.B.C. 2016, NOTIFY THE ARCHITECT IMMEDIATELY BEFORE PROCEEDING WITH THE WORK.

CONSTRUCTION SCHEDULING

CONTRACTOR SHALL COORDINATE HIS CONSTRUCTION OPERATIONS WITH OWNER'S REPRESENTATIVE PRIOR TO SCHEDULING AND START OF THE WORK – CONTRACTOR SHALL PROVIDE PROTECTION TO ALL EXISTING SPACES AND SYSTEMS WHICH ARE IN USE AND ARE ADJOINING THE WORK AND ARE NOT PART OF THE WORK.

CONDUIT RUNS TO ELECTRICAL PANELS

CONTRACTOR SHALL COORDINATE ALL ELECTRICAL CONDUIT AND ELECTRICAL WIRE RUNS. CONTRACTOR TO FIRESTOP ALL PENETRATIONS THROUGH FIRE/SMOKE PARTITIONS, TYP. CONTRACTOR TO REPAIR/REPLACE ANY DAMAGE TO MATERIALS/SYSTEMS AS A RESULT OF CONSTRUCTION WORK.

DRILLED IN EXPANSION ANCHORS

WHEN INSTALLING DRILLED-IN ANCHORS AND/OR POWDER DRIVEN PINS IN EXISTING NON-PRESTRESSED REINFORCED CONCRETE, USE CARE AND CAUTION TO AVOID CUTTING OR DAMAGING THE EXISTING REINFORCING BARS.

MAINTAIN A MINIMUM CLEARANCE OF ONE INCH BETWEEN THE REINFORCEMENT AND THE DRILLED IN ANCHORAGE AND/OR PIN.

CEILING SYSTEM INSTALLATION

THE CONTRACTOR SHALL FULLY REVIEW THE PLANS AND SPECIFICATIONS, TO INSURE THE PROPER TIMING AND INSTALLATION SEQUENCING, FOR THE VARIOUS TRADES INSTALLING SYSTEMS IN THE CEILING SPACES.

THE PLANS AND SPECIFICATIONS INCLUDE INFORMATION & DETAILS TO GUIDE THE CONTRACTOR IN THIS PROCESS. THE CONTRACTOR IS REQUIRED TO COORDINATE ALL THE SUBCONTRACTORS AND THEIR VARIOUS INSTALLATION REQUIREMENTS, TO SCHEDULE ALL WORK TO ENSURE THAT THERE IS NO OVERLAP OR CONFLICT BETWEEN THE TRADES, AND TO ENSURE THE FINAL INSTALLATION WILL MEET THE INTENT OF THE PLANS AND THE REQUIREMENTS OF THE CURRENT CODES REFERENCED HEREIN.

ALL COMPRESSION STRUTS MUST BE LOCATED ON AN 12 FT. X 12 FT. GRID AND LINE UP IN BOTH DIRECTIONS. MAXIMUM WALL DISTANCES TO THE FIRST STRUT IN A ROW SHALL BE 6 FT.

THE CONTRACTOR SHALL COORDINATE HIS WORK WITH MECHANICAL, ELECTRICAL AND PLUMBING CONTRACTORS TO MAKE SURE THAT THE CEILING CAN BE INSTALLED PER THE ARCHITECTURAL DRAWINGS, SPECIFICATIONS, AND THE REQUIREMENTS ABOVE.

IT IS THE CONTRACTOR'S RESPONSIBILITY TO ADVISE THE ARCHITECT PRIOR TO THE START OF CONSTRUCTION OF ANY CONFLICTS IN THE PLANS WHICH WILL PREVENT THE CONTRACTOR OR THE SUBCONTRACTORS FROM INSTALLING THEIR CEILING SYSTEM COMPONENTS IN ACCORDANCE WITH THE REQUIREMENTS OF THE PLANS AND CURRENT CODES.

SPECIFIC NOTES

ALL NOTES SHALL REFER TO NEW CONSTRUCTION, UNLESS "EXISTING" OR (E) IS SPECIFICALLY MENTIONED.

HAZARDOUS MATERIAL

ALL COMPRESSED GASES AND HAZARDOUS MATERIALS USE AND STORAGE TO COMPLY WITH THE CALIFORNIA FIRE CODE.

ACCESSIBILITY/ADA COMPLIANCE REQUIREMENTS

THESE DRAWINGS ARE INTENDED TO MEET THE ACCESSIBILITY STANDARDS SET FORTH IN TITLE 24 OF THE 2016 CBC; THEY MAY NOT ADDRESS ALL ASPECTS OF THE AMERICAN DISABILITIES ACT (ADA). AMONG OTHER THINGS, THE ADA OUTLINES POLICIES THAT THE OWNER OR LEGALLY RESPONSIBLE PARTY SHOULD DEVELOP AND IMPLEMENT. IMPLEMENTATION OF POLICIES MAY DEPEND ON ACTIONS UNDERTAKEN BY THE OWNER'S EMPLOYEES OR OTHER PARTIES THAT OPERATE UNDER SOME FORM OF AGREEMENT WITH THE OWNER. ALTHOUGH THESE AND OTHER MATTERS ARE INCLUDED IN THE ADA, THEY ARE OUTSIDE THE SCOPE OF ARCHITECTURAL PROFESSIONAL SERVICES.

THE TOWN OF LOS GATOS BUILDING DIVISION ENFORCES THE CBC CHAPTER 11B FOR DISABLED ACCESS COMPLIANCE AND DOES NOT REVIEW OR APPROVE PLANS FOR ADA COMPLIANCE.

ACCESSIBILITY (ADA)

THE AMERICANS WITH DISABILITIES ACT (HEREAFTER ADA) PROVIDES THAT ALTERATIONS TO A FACILITY MUST BE MADE IN SUCH A MANNER THAT, TO THE MAXIMUM EXTENT FEASIBLE, THE ALTERED PORTIONS OF THE FACILITY ARE READILY ACCESSIBLE TO AND BY INDIVIDUALS WITH DISABILITIES. THE CLIENT ACKNOWLEDGES THAT THE REQUIREMENTS OF ADA WILL BE INTERPRETED VARIOUSLY AND THAT THESE INTERPRETATIONS MAY CONTRADICT ONE ANOTHER. THIS BEING THE CASE, THE ARCHITECT, THEREFORE, WILL USE ITS BEST PROFESSIONAL EFFORTS TO INTERPRET APPLICABLE ADA REQUIREMENTS AND OTHER FEDERAL, STATE AND LOCAL LAWS, RULES, CODES, ORDINANCES AND REGULATIONS AS THEY APPLY TO THE PROJECT. THE ARCHITECT, HOWEVER, CANNOT AND DOES NOT WARRANTY OR GUARANTEE THAT THE CLIENT'S PROJECT WILL COMPLY WITH ALL INTERPRETATIONS OF ADA REQUIREMENTS AND/OR THE REQUIREMENTS OF OTHER FEDERAL, STATE OR LOCAL LAWS, RULES, CODES, ORDINANCES AND REGULATIONS AS THEY APPLY TO THE PROJECT. THE ARCHITECT RECOMMENDS THAT THE CLIENT ENLIST THE SERVICES OF A CERTIFIED ACCESS SPECIALIST THAT IS RECOGNIZED AS SUCH BY THE DIVISION OF STATE ARCHITECT, OR AN ALTERNATIVE ADA EXPERT THAT IS QUALIFIED BY THE GOVERNING AGENCY WITH OVERALL RESPONSIBILITY FOR INTERPRETING AND ENFORCING THE ADA AT THE FEDERAL, STATE AND LOCAL AGENCY LEVELS, AND THAT THIS SPECIALIST OR EXPERT PRESENT THE WORK PRODUCT OF HIS OR HER SERVICES TO THE ARCHITECT DURING THE DESIGN PROCESS OF THIS PROJECT.

DRAWING INDEX

GENERAL
T1.0 TITLE SHEET – DRAWING INDEX
T1.2 GENERAL NOTES
A0.00 SYMBOLS, NOTES, AND STANDARD MOUNTING HEIGHTS.
A0.01 ABBREVIATIONS AND PARTITION SCHEDULE

CIVIL
C-1.0 COVER SHEET
C-1.1 CONSTRUCTION NOTES
C-1.2 TOPOGRAPHIC SURVEY
C-2.0 DEMOLITION PLAN
C-3.0 GRADING + DRAINAGE PLAN
~~C-3.5 GRADING PLAN~~
C-5.0 EROSION CONTROL PLAN
C-5.1 EROSION CONTROL DETAILS
C-5.2 CLEAN BAY BLUE PRINT
C-6.0 CONSTRUCTION DETAILS

ARCHITECTURAL
A0.02 EGRESS & ACCESSIBILITY OVER ALL SITE & BUILDING
A0.03 DEMOLITION SITE PLAN.OVERALL SITE
A0.04 SITE PLAN – OVERALL SITE
A0.05 PARTIAL SITE PLANS – ENGINEERING ~~& STORAGE BUILDING~~
A1.0 DEMOLITION FLOOR PLAN & RCP – ENGINEERING BUILDING
A1.1 DEMOLITION ROOF PLAN – ENGINEERING BUILDING
A2.0 FLOOR PLAN & RCP – ENGINEERING BUILDING
A2.1 ROOF PLAN & LINE OF SIGHT DIAGRAM – ENGINEERING BUILDING
A2.2 ENLARGED FLOOR PLANS & INTERIOR ELEVATIONS – RESTROOMS – ENGINEERING BUILDING
A2.3 ENLARGED FLOOR PLAN – KITCHEN/BREAK 112 – INTERIOR ELEVATION – ENGINEERING BUILDING
~~A2.4 FLOOR PLAN – STORAGE BUILDING~~
A5.0 DOOR & WINDOW SCHEDULES – ENGINEERING BUILDING
A5.1 DOOR HARDWARE SPECIFICATIONS – ENGINEERING BUILDING
A5.2 FINISH PLAN– ENGINEERING BUILDING, COLOR & MATERIAL SCHEDULE, WALL & TOILET ACCESSORIES SCHEDULE ENGINEERING BUILDING
A8.0 EXTERIOR ELEVATIONS & SECTION – ENGINEERING BUILDING
~~A8.1 EXTERIOR ELEVATIONS – STORAGE BUILDING~~
A9.0 DETAILS
A9.1 DETAILS
A9.2 DETAILS
A9.3 DETAILS

STRUCTURAL
S1.0 ABBREVIATIONS AND GENERAL NOTES
S1.1 GENERAL NOTES
S2.0 ENGINEERING BUILDING FOUNDATION AND ROOF FRAMING PLANS
~~S2.1 STORAGE BUILDING FOUNDATION PLAN~~
~~S2.2 STORAGE CONCRETE DETAILS~~
S5.1 TYPICAL CONCRETE DETAILS
S8.0 TYPICAL WOOD FRAMING DETAILS
S8.1 WOOD FRAMING DETAILS

MECHANICAL
M0.1 LEGEND, NOTES AND EQUIPMENT SCHEDULE
M0.2 MECHANICAL SPECIFICATIONS
M0.3 TITLE 24 FORMS–ENGINEERING BUILDING
M0.4 TITLE 24 FORMS–ENGINEERING BUILDING
~~M0.5 TITLE 24 FORMS–STORAGE BUILDING~~
~~M0.6 TITLE 24 FORMS–STORAGE BUILDING~~
M2.1 MECHANICAL FLOOR AND ROOF PLANS – ENGINEERING BUILDING
~~M2.2 MECHANICAL FLOOR PLAN – STORAGE BUILDING~~
M6.1 MECHANICAL DETAILS
M9.1 CONTROLS

PLUMBING
P0.1 PLUMBING LEGEND, GENERAL NOTES AND SCHEDULES
P0.2 PLUMBING CALCULATIONS AND SPECIFICATIONS
P1.0 PLUMBING SITE PLAN
P1.1 PLUMBING DEMOLITION ENGINEERING BUILDING REMODELING PLAN
P2.1 SANITARY SEWER AND VENT PLUMBING ENG.BUILDING REMODELING PLAN
P3.1 DOMESTIC WATER AND GAS PLUMBING ENG.BUILDING REMODELING PLAN
~~P3.2 DOMESTIC WATER NEW STEEL BUILDING PLUMBING PLAN~~
P4.1 PLUMBING ROOF – ENGINEERING BUILDING REMODELING PLAN
~~P4.2 PLUMBING ROOF NEW STEEL BUILDING PLAN~~
P6.1 PLUMBING DETAILS – 1
P6.2 PLUMBING DETAILS – 2

ELECTRICAL
E0.1 LEGEND, NOTES, DIAGRAM AND ABBREVIATIONS
E0.2 ELECTRICAL SPECIFICATIONS
E0.3A PARTIAL SINGLE LINE DIAGRAM AND PANEL SCHEDULES
E0.3B PANEL SCHEDULES
E0.4A TITLE 24 FORMS – INDOOR LIGHTING PART 1 ENGINEERING BUILDING
E0.4B TITLE 24 FORMS – INDOOR LIGHTING PART 2 ENGINEERING BUILDING
E0.4C TITLE 24 FORMS – INDOOR LIGHTING PART 3 ENGINEERING BUILDING
~~E0.5A TITLE 24 FORMS – INDOOR LIGHTING PART 1 STORAGE BUILDING~~
~~E0.5B TITLE 24 FORMS – INDOOR LIGHTING PART 2 STORAGE BUILDING~~
~~E0.5C TITLE 24 FORMS – INDOOR LIGHTING PART 3 STORAGE BUILDING~~
~~E0.6A TITLE 24 FORMS – OUTDOOR LIGHTING PART 1~~
~~E0.6B TITLE 24 FORMS – OUTDOOR LIGHTING PART 2~~
~~E0.6C TITLE 24 FORMS – OUTDOOR LIGHTING PART 3~~
E1.0 OVERALL SITE PLAN – ELECTRICAL
E2.1 CEILING PLAN – LIGHTING – ENGINEERING BUILDING
~~E2.2 CEILING PLAN – LIGHTING – STORAGE BUILDING~~
E3.1 FLOOR PLAN – POWER – ENGINEERING BUILDING
~~E3.2 FLOOR PLAN – POWER – STORAGE BUILDING~~
E4.1 ROOF PLAN – ELECTRICAL – ENGINEERING BUILDING
~~E4.2 ROOF PLAN – ELECTRICAL – STORAGE BUILDING~~
E5.1 CEILING RCP PLAN – PHOTOMETRICS (ENGINEERING BUILDING REMODELING)
E5.2 CEILING RCP PLAN – PHOTOMETRIC , EGRESS PATH (ENGINEERING BUILDING REMODELING)
~~E5.3 CEILING RCP PLAN – PHOTOMETRIC , EGRESS PATH NEW STEEL BUILDING~~
~~E5.4 CEILING RCP PLAN – PHOTOMETRIC , EGRESS PATH NEW STEEL BUILDING~~

STEEL BUILDING DRAWINGS
F1 COVER SHEET
F2 ANCHOR BOLT PLAN
F3 ANCHOR BOLT REACTIONS
F4 ANCHOR BOLT DETAILS
F5 ROOF FRAMING PLAN
F6 ROOF SHEETING PLAN
F7 FRONT SIDEWALL
F8 BACK SIDEWALL
F9 LEFT SIDEWALL
F10 RIGHT SIDEWALL
DET1 FRAME CROSS SECTION
DET2 FRAME CROSS SECTION
DET3 FRAME CROSS SECTION
DET4 PARTITION
DET5 STANDARD DETAILS
DET6 STANDARD DETAILS
DET7 STANDARD DETAILS
DET8 STANDARD DETAILS
DET9 STANDARD DETAILS
DET10 STANDARD DETAILS
DET11 STANDARD DETAILS
DET12 STANDARD DETAILS
DET13 STANDARD DETAILS
DET14 STANDARD DETAILS
N.I.C.

DEFERRED SUBMITTAL
FIRE SPRINKLER SYSTEM AND FIRE SERVICE UNDERGROUND DRAWINGS

Cuschieri Horton Architects
1475 S. Bascom Ave. Suite 204
Campbell, California 95008
408.371.8200 Fx 408.371.8201

LICENSED ARCHITECT
DANIEL ANTHONY CUSCHIERI
C-34957
JAN 31 2021
RENEWAL DATE
STATE OF CALIFORNIA

TITLE SHEET

TOWN OF LOS GATOS
ENGINEERING BUILDING TI ~~AND STORAGE BUILDING~~
41 MILES AVENUE,
LOS GATOS, CA 95030

REVISIONS

NO.	ITEM	DATE
1	RESPONSE TO FIRST REVIEW COMMENTS	07/17/20

PERMIT #:

SUBMITTAL:
CITY SUBMITTAL SET

DRAWN BY: DN
CHECKED BY: RB
JOB NO: 1826 DATE: 12/04/19

SHEET NO.
T1.0

8/11/2020 8:33 AM

GENERAL NOTES

ACCESSIBLE ROUTE

CHANGES IN LEVEL IN THE ACCESSIBLE ROUTE OF 1/4" HIGH MAX. SHALL BE PERMITTED TO BE VERTICAL AND WITHOUT EDGE TREATMENT. CHANGES IN LEVEL BETWEEN 1/4" HIGH MIN. AND 1/2" HIGH MAX. SHALL BE BEVELED WITH A SLOPE NOT STEEPER THAN 1:2.

THRESHOLDS AT DOORWAYS SHALL BE 1/2" HIGH MAX.

DOORS WITH CLOSERS ON THE ACCESSIBLE ROUTE SHALL BE ADJUSTED SO THAT FROM AN OPEN POSITION OF 90 DEGREES, THE TIME REQUIRED TO MOVE THE DOOR TO A POSITION OF 12 DEGREES FROM THE LATCH IS 5 SECONDS.

THE FORCE REQUIRED TO OPEN DOORS, OTHER THAN FIRE DOORS, SHALL NOT EXCEED 5 LBS. THE FORCE REQUIRED TO OPEN FIRE DOORS SHALL BE 15 LBS. MAX. OR AS ALLOWED BY THE AUTHORITY HAVING JURISDICTION.

DOOR SURFACES WITHIN 10 INCHES OF THE FINISH FLOOR MEASURED VERTICALLY SHALL HAVE A SMOOTH SURFACE ON THE PUSH SIDE EXTENDING THE FULL WIDTH OF THE DOOR. PARTS CREATING HORIZONTAL OR VERTICAL JOINTS IN THESE SURFACES SHALL BE WITHIN 1/16" OF THE SAME PLANE AS THE OTHER AND BE FREE OF SHARP OR ABRASIVE EDGES. CAVITIES CREATED BY ADDED KICK PLATES SHALL BE CAPPED.

ALL OPERABLE PARTS OF DOOR HARDWARE ON ACCESSIBLE ROUTE SHALL BE LOCATED 34" MIN. AND 44" MAX. ABOVE FINISH FLOOR AND SHALL NOT REQUIRE TIGHT GRASPING, PINCHING, OR TWISTING OF THE WRIST.

ASBESTOS AND ASBESTOS PRODUCTS

UNDER CALIFORNIA TITLE 8, THE OWNER AND CONTRACTOR BOTH HAVE RESPONSIBILITIES TO DETERMINE THE EXISTENCE OF ASBESTOS CONTAINING MATERIALS IN AREAS TO BE ALTERED OR REMODELED PRIOR TO COMMENCEMENT OF WORK AND TO TAKE APPROPRIATE MEASURES TO PROTECT PERSONNEL AND PATIENTS. CAL–OSHA HAS JURISDICTION OVER ASBESTOS RELATED WORK. ASBESTOS RELATED WORK SHALL BE DONE IN ACCORDANCE WITH CALIFORNIA GENERAL INDUSTRIAL SAFETY ORDERS, TITLE 8, SECTION 341.6 THROUGH 341.14. ASBESTOS IN THE WORK ENVIRONMENT IS REGULATED BY TITLE 8, SECTION 5208.

SUBMITTALS

CONTRACTOR SHALL SUBMIT SUBMITTALS BEFORE PROCEEDING WITH THE WORK. HE SHALL BE RESPONSIBLE FOR OBTAINING SUCH COPIES OF PRODUCT DATA, SHOP DRAWINGS, SAMPLES, AND OTHER SUBMITTALS AS IT MAY REQUIRE FOR ITS OWN USE.

CONTRACTOR SHALL SUBMIT MILESTONE SUBMITTALS – SUBMITTALS FOR INTERMEDIATE MILESTONES WILL BE DEFINED BY MILESTONE. THESE SUBMITTALS ARE ALSO ACTION SUBMITTALS. SUBMIT A SCHEDULE PREPARATION AND PROCESSING OF SUBMITTALS TO INCLUDE START, COMPLETION, CRITICAL PATH, MILESTONES, AND INSPECTIONS.

CONTRACTOR RESPONSIBILITIES:

A. CONTRACTOR IS RESPONSIBLE FOR DEVELOPING AND MAINTAINING A SUBMITTAL LOG FOR ALL CONTRACTOR SUBMITTALS. THIS EFFORT INCLUDES:
   1) DEVELOPING A SUBMITTAL LOG TO IDENTIFY AND TRACK ALL ACTION SUBMITTALS REQUIRED BY THE CONTRACT DOCUMENTS.
   2) PROVIDING COPIES OF THE SUBMITTAL LOG TO ARCHITECT/OWNER IN FORM ACCEPTABLE TO THE ARCHITECT/OWNER.
   3) MAINTAINING AN UP–TO–DATE SUBMITTAL LOG.
   4) REVIEWING THE SUBMITTAL LOG WEEKLY.
B. ADDITIONALLY, AT EACH SCHEDULED PROGRESS MEETING, CONTRACTOR SHALL PROVIDE LOOK–AHEAD LISTING OF ALL SUBMITTALS PLANNED TO BE PROVIDED TO OWNER DURING THE FORTHCOMING TWO (2) WEEK PERIOD.

SCHEDULING

A. PREPARE AND SUBMIT FOUR (4) COPIES OF THE SUBMITTAL LOG TO ARCHITECT/OWNER NO LATER THAN TWENTY–ONE (21) DAYS AFTER THE OFFICIAL START DATE STATED IN THE NOTICE TO PROCEED.
B. ALLOW AT LEAST FOURTEEN (14) DAYS FOR ARCHITECT/OWNER'S REVIEW AND RETURN OF SUBMITTAL LOG.
C. AT EACH SCHEDULED PROGRESS MEETING, PROVIDE A LOOK–AHEAD LISTING OF ALL SUBMITTALS PLANNED TO BE PROVIDED TO OWNER DURING THE FORTHCOMING TWO (2) WEEK PERIOD.

SUBMITTAL LOG INFORMATION

A. THE SUBMITTAL LOG, AT A MINIMUM, MUST CONTAIN THE FOLLOWING INFORMATION FOR EACH REQUIRED ACTION SUBMITTAL:
   1) ALL SUBMITTALS SHALL BE GROUPED BY DEFINABLE FEATURE OF WORK.
   2) A UNIQUE SUBMITTAL TRACKING NUMBER. ANY RE–SUBMITTALS MUST BE SO IDENTIFIED.
   3) DESCRIPTION OF THE SUBMITTAL.
   4) DATE ARCHITECT/OWNER–ACCEPTANCE REQUIRED SO AS NOT TO IMPACT THE PROJECT'S CRITICAL PATH SCHEDULE.
   5) ACTUAL DATE TRANSMITTED TO ARCHITECT/OWNER.
   6) DATE DUE FROM OWNER PER REVIEW TIME ALLOWED BY CONTRACT DOCUMENTS (NO LESS THAN TWENTY–ONE (21) DAYS).
   7) ACTUAL DATE WHEN CONTRACTOR RECEIVED SUBMITTAL(S) BACK FROM ARCHITECT/OWNER.
   8) OWNER'S ACTION ON SUBMITTAL (NO EXCEPTIONS TAKEN, MAKE CORRECTIONS NOTED, REVISE AND RESUBMIT, REJECTED, OR RETURNED WITHOUT ACTION).
   9) COMMENTS/REMARKS.

SUBMISSION REQUIREMENTS

A. MAKE ALL SUBMITTAL TO ARCHITECT/OWNER OR TO AN INDIVIDUAL DESIGNATED BY ARCHITECT.
B. FAILURE ON THE PART OF CONTRACTOR TO INDICATE APPROVAL ON SUBMITTAL PRIOR TO SUBMISSION TO ARCHITECT WILL RESULT IN SUBMITTAL BEING RETURNED TO CONTRACTOR WITHOUT BEING ACTED UPON.
C. NO DELAYS IN CONSTRUCTION OCCASIONED BY CONTRACTOR'S FAILURE TO SUBMIT MATERIAL FOR APPROVAL IN ACCORDANCE WITH THE SUBMITTAL SCHEDULE WILL BE EXCUSED.
D. PACKAGE EACH SUBMITTAL APPROPRIATELY FOR TRANSMITTAL AND HANDLING.
E. NUMBER AND TYPE OF COPIES TO BE SUBMITTED, DISTRIBUTED, AND RETURNED WILL BE AS STATED IN THIS SECTION, UNLESS OTHERWISE SPECIFIED IN TECHNICAL SECTIONS.
F. SUBMITTAL OF INFORMATION NOT REQUIRED AS A SUBMITTAL, OR COVERING WORK FOR WHICH THE SUBMITTAL HAS BEEN RETURNED AS "APPROVED" OR "APPROVED AS NOTED", WILL BE RETURNED WITHOUT REVIEW.
G. APPROVAL OF A SEPARATE MATERIAL, PRODUCT, OR COMPONENT DOES NOT IMPLY APPROVAL OF ASSEMBLY IN WHICH THE ITEM FUNCTIONS.
H. INCOMPLETE SUBMITTALS WILL BE RETURNED WITHOUT REVIEW.
I. SUBMITTAL RECEIVED FROM SOURCES OTHER THAN CONTRACTOR WILL BE RETURNED WITHOUT ACTION.
J. SUBMIT COMPLETE SUBMITTALS FOR EACH PORTION OF THE WORK; SUBMIT COMPONENTS OF THE WORK INTERRELATED AS A SYSTEM AT THE SAME TIME.
K. WHEN SUBMITTAL ACCEPTABILITY IS DEPENDENT ON CONDITIONS, ITEMS, OR MATERIALS INCLUDED IN SEPARATE SUBSEQUENT SUBMITTALS, THE SUBMITTAL WILL BE RETURNED WITHOUT REVIEW.

THE CONTRACTOR SHALL:

A. REVIEW FOR COMPLIANCE WITH CONTRACT DOCUMENTS AND APPROVE SUBMITTALS BEFORE TRANSMITTING TO ARCHITECT.
B. BE RESPONSIBLE FOR:
   1. DETERMINATION AND VERIFICATION OF MATERIALS INCLUDING MANUFACTURER'S CATALOG NUMBERS AND SIMILAR DATA.
   2. DETERMINATION AND VERIFICATION OF FIELD MEASUREMENTS CLEARLY IDENTIFIED AS SUCH AND FIELD CONSTRUCTION CRITERIA.
   3. DETERMINATION OF ACCURACY AND COMPLETENESS OF DIMENSIONS AND QUANTITIES.
   4. CONFIRMATION AND COORDINATION OF DIMENSIONS AND FIELD CONDITIONS AT SITE.
   5. SAFETY PRECAUTIONS.
   6. COORDINATION AND PERFORMANCE OF WORK OF ALL TRADES.
C. PRIOR TO SENDING SUBMITTALS TO ARCHITECT, CONTRACTOR IS TO REVIEW THEM FOR:
   1. SUBMITTAL COMPLETENESS AND ACCURACY.
   2. COMPLIANCE WITH REQUIREMENTS OF CONTRACT DOCUMENTS.
   3. COMPATIBILITY WITH OTHER SUBMITTALS, SHOP DRAWINGS, SUBSTITUTIONS AND WORK OF OTHER TRADES.
   4. COORDINATION WITH EXISTING JOB CONDITIONS.
   5. FIELD VERIFICATION OF DIMENSIONS.
D. APPLY CONTRACTOR'S STAMP AND DATE TO EACH DOCUMENT AND COMPONENT OF EACH SUBMITTAL CERTIFYING COMPLIANCE WITH CONTRACT DOCUMENTS. CONTRACTOR'S STAMP MUST BE APPROVED BY ARCHITECT PRIOR TO THE FIRST SUBMITTAL. CONTRACTOR SHALL STAMP ALL SUBMITTALS WITH SUBMITTAL NUMBER AND DATE. CONTRACTOR TO WET SIGN FIRST PAGE OF BOUND SETS OF SUBMITTALS. THE PERSON SIGNING THE STAMP SHALL BE ONE DESIGNATED IN WRITING BY CONTRACTOR AS HAVING THAT AUTHORITY.

SUPPORTS FOR GYPSUM BOARD AND WOOD STUDS

A. COORDINATION: COORDINATE DETAILS AND REQUIREMENTS OF OTHER WORK THAT ADJOINS OR FASTENS TO WOOD STUDS OR NAILERS AND REQUIRES BACKING OR SPECIAL SUPPORT FRAMING.
   1. COORDINATE INSTALLATION OF WOOD FRAMES, ANCHORS, BLOCKING, ELECTRICAL WORK, AND MECHANICAL WORK WHICH IS TO BE PLACED BY OTHERS IN OR BEHIND PARTITION FRAMING. ALLOW SUCH ITEMS TO BE INSTALLED AFTER FRAMING IS COMPLETE.
   2. ITEMS REQUIRING BACKING OR SUPPORT INCLUDE, BUT ARE NOT NECESSARILY LIMITED TO, CASEWORK, WALL MOUNTED FINISH HARDWARE, MISCELLANEOUS SPECIALTIES, HANDRAIL BRACKETS, AND SIMILAR ITEMS.
   3. COORDINATE THE LOCATION OF HANGER AND DIAGONAL BRACING WIRES WITH OTHER WORK.

B. PRE–INSTALLATION MEETING:
   1. CONTRACTOR SHALL ARRANGE MEETING TO BE ATTENDED BY ARCHITECT, OWNER'S REPRESENTATIVE, CONTRACTOR AND CONTRACTOR'S INSTALLER, AND AGENTS OF MANUFACTURERS, ALL OF WHOM SHALL HAVE HAD AT LEAST ONE WEEK'S ADVANCE NOTICE.
   2. CONVENE MEETING MINIMUM ONE WEEK PRIOR TO COMMENCING WORK OF THIS SECTION.
   3. CONFERENCE SHALL BE HELD AT THE JOB SITE.
   4. REQUIREMENTS OF RELATED WORK, PREPARATION, STORAGE AND HANDLING, MATERIALS, SPECIFICATION REQUIREMENTS, COORDINATION WITH RELATED OR ADJOINING WORK, WORK SEQUENCE, ITEMS REQUIRING BACKING AND SUPPORT, AND ISSUES THAT MIGHT AFFECT PROPER WOOD FRAMING SUPPORT ASSEMBLIES SHALL BE DISCUSSED.

C. SHOP DRAWINGS SUBMITTALS:
   1. INDICATE COMPONENT DETAILS, STUD LAYOUT, FRAMED OPENINGS, ANCHORAGE TO STRUCTURE, TYPE AND LOCATION OF FASTENERS, AND ACCESSORIES OR ITEMS REQUIRED OF OTHER RELATED WORK.
   2. DESCRIBE METHOD OF SECURING STUDS TO TOP PLATE, SPLICING, AND FOR BLOCKING AND REINFORCEMENT TO FRAMING CONNECTIONS.
   3. SHOW PROVISIONS FOR HEAVY FIXTURE ANCHORAGE TO WOOD STUD SYSTEMS AND FOR BACKING SYSTEM THAT DIFFERS FROM TYPICAL DETAILS.
   4. SHOW LAYOUT OF CEILING SUPPORT SYSTEM.

D. STRUCTURAL CALCULATIONS AND DETAILS:
   SUCH CALCULATIONS AND DETAILS SHOWING THAT STRUCTURAL DESIGN OF WALL AND CEILING SYSTEMS MEETS SPECIFIED REQUIREMENTS. LICENSED STRUCTURAL ENGINEER SHALL STAMP CALCULATIONS.

WORK RESTRICTIONS

CONTRACTOR'S USE OF OWNER'S PREMISES

A. THE PREMISES WILL BE OCCUPIED DURING PERFORMANCE OF WORK UNDER THE CONTRACT. TAKE PROPER PRECAUTIONS TO ENSURE SAFETY OF OWNER'S PERSONNEL, PATIENTS, AND GENERAL PUBLIC DURING THE CONSTRUCTION PERIOD.
B. IN ADDITION TO SITE UTILIZATION LIMITATIONS AND REQUIREMENTS SHOWN ON DRAWINGS, AND INDICATED BY OTHER CONTRACT DOCUMENTS, ADMINISTER ALLOCATION OF AVAILABLE SPACE TO PRODUCE BEST OVERALL EFFICIENCY IN PERFORMANCE OF TOTAL WORK OF PROJECT.
C. CONTRACTOR WILL HAVE USE OF THE PREMISES FOR WORK, STORAGE, AND VEHICULAR PARKING AS APPROVED BY OWNER.
D. LOCATION OF STAGING AREAS, DEBRIS MATERIAL, AND RECYCLING MATERIAL WILL BE AS INDICATED ON DRAWINGS OR DESIGNATED BY OWNER.
E. CONTRACTOR SHALL NO UNREASONABLY ENCUMBER SITE/PREMISES WITH MATERIAL, EQUIPMENT, DEBRIS MATERIAL, OR RECYCLING MATERIAL.
F. SCHEDULE DELIVERIES TO MINIMIZE SPACE AND TIME REQUIREMENTS FOR STORAGE OF MATERIALS AND EQUIPMENT ON PROJECT SITE.
H. OBTAIN OWNER'S APPROVAL AT LEAST THREE WORKING DAYS IN ADVANCE OF DELIVERIES OF MATERIAL OR EQUIPMENT OR OTHER ACTIVITIES WHICH MAY CONFLICT WITH OWNER'S USE OF FACILITIES.
I. CONFORM TO SITE RULES AND REGULATIONS AFFECTING THE WORK WHILE ENGAGED IN PROJECT CONSTRUCTION.
J. PARKING: THIS PARAGRAPH COVERS REQUIREMENTS FOR CONSTRUCTION PERSONNEL PARKING. CONSTRUCTION PERSONNEL INCLUDES CONTRACTOR'S PERSONNEL AND EMPLOYEES, SUBCONTRACTORS AND THEIR EMPLOYEES, SUPPLIERS, VENDORS AND VISITORS.
   1. CONTRACTOR SHALL PARK AT DESIGNATED AREAS PER OWNER.

K. NOISE:
   1. PROVIDE METHODS, MEANS, AND FACILITIES TO MINIMIZE NOISE PRODUCED BY CONSTRUCTION OPERATIONS.
   2. MAXIMUM NOISE LEVELS: THE FOLLOWING APPLIES TO AREAS WITHIN 1,000 FEET OF ANY RESIDENCE, BUSINESS, ADJACENT BUILDINGS OR OTHER POPULATED AREA.
      a) EQUIPMENT, NOISE LEVELS SHALL NOT EXCEED 85 DBA AT 50 FEET.
   3. EQUIPMENT:
      a) KEEP NOISE FROM JOB EQUIPMENT TO A MINIMUM BY USE OF ADEQUATE MUFFLERS AND OTHER APPROPRIATE MEANS.
      b) AIR COMPRESSORS SHOULD BE OF A QUIET TYPE SUCH AS A"WHISPERIZED" COMPRESSOR. COMPRESSOR HOODS SHALL BE CLOSED WHILE EQUIPMENT IS IN OPERATION.
      c) FORKLIFTS SHOULD BE ELECTRICALLY POWERED RATHER THAN GASOLINE OR DIESEL POWERED.
      d) OBTAIN SPECIAL PERMISSION TO USE JACKHAMMERS. EQUIP JACKHAMMERS WITH EXHAUST MUFFLERS AND STEEL MUFFLING SLEEVES. PROVIDE PORTABLE NOISE BARRIERS AROUND JACK HAMMERING, CONSTRUCT BARRIERS OF 3/4 INCH PLYWOOD LINED WITH 1 INCH THICK ACOUSTICAL FIBERGLASS ON WORK SIDE.
      e) MINIMIZE USE OF IMPACT WRENCHES FOR BOLTING TORSION CONTROL BOLTS TO CONNECT STEEL STRUCTURAL FRAMES.
      f) PRE–CUT METAL DECKING OFF SITE TO REDUCE ON SITE SAWING.
   4. OPERATIONS: KEEP NOISY EQUIPMENT AS FAR AS POSSIBLE FROM NOISE–SENSITIVE SITE BOUNDARIES. MACHINES SHOULD NOT BE LEFT IDLING. USE ELECTRIC POWER IN LIEU OF INTERNAL COMBUSTION ENGINE POWER WHEREVER POSSIBLE. MAINTAIN EQUIPMENT PROPERLY TO REDUCE NOISE FROM EXCESSIVE VIBRATION, FAULTY MUFFLERS, OR OTHER SOURCES. ALL ENGINES SHALL HAVE PROPERLY FUNCTIONING MUFFLERS.
   5. SCHEDULING:
      a) SCHEDULE NOISY OPERATIONS SO AS TO MINIMIZE THEIR DURATION AT ANY GIVEN LOCATION, AND TO MINIMIZE DISRUPTION TO THE ADJOINING USERS.
      b) NOTIFY OWNER AND ARCHITECT IN ADVANCE OF PERFORMING WORK CREATING UNUSUAL NOISE AND SCHEDULE SUCH WORK AT TIMES MUTUALLY AGREEABLE.
      c) COORDINATE TIMING OF NOISY OPERATIONS WITH OWNER.
   6. DO NOT PLAY RADIOS, TAPE RECORDERS, TELEVISIONS, AND OTHER SIMILAR ITEMS AT CONSTRUCTION SITE.

L. PROMPTLY CLEAN UP DEBRIS DROPPED IN THE IMMEDIATE AREA DUE TO WORK, SERVICE ACCESS WAYS OR STREETS UNDER THIS CONTRACT TO THE SATISFACTION OF ARCHITECT.
M. USE THE PREMISES FOR WORK AND CONSTRUCTION OPERATIONS TO ALLOW FOR WORK BY OTHER CONTRACTORS, UTILITY COMPANIES, AND OWNER.
N. PROVIDE, LOCATE, AND PROTECT CONTROL POINTS. PROVIDE, COORDINATE, AND CHECK DIMENSIONS AND ELEVATIONS AS NECESSARY FOR LAYOUT WORK.
O. IF THE AREAS ON THE PREMISES ARE NOT SUFFICIENT, OBTAIN AND PAY FOR USE OF ADDITIONAL WORK, STORAGE, AND PARKING AREAS NEEDED.
K. NO MATERIALS STORAGE WILL BE PERMITTED TO BLOCK EXISTING LOADING DOCK.

USE OF EXISTING BUILDING

A. CONTRACTOR, SUBCONTRACTORS, AND ALL THEIR REPRESENTATIVES AND PERSONNEL ARE PROHIBITED ACCESS TO OCCUPIED PORTIONS OF EXISTING BUILDINGS EXCEPT AS DIRECTED AND DEFINED OR WITH OWNER'S PRIOR KNOWLEDGE AND APPROVAL.
B. OBTAIN OWNER'S APPROVAL AT LEAST 30 WORKING DAYS IN ADVANCE OF ANY WORK WITHIN OR WHICH MIGHT AFFECT EXISTING SPACES.
C. MAINTAIN THE EXISTING BUILDING IN A SAFE AND WEATHERTIGHT CONDITION THROUGHOUT THE CONSTRUCTION PERIOD. REPAIR DAMAGE CAUSED BY CONSTRUCTION OPERATIONS. TAKE ALL PRECAUTIONS NECESSARY TO PROTECT THE EXISTING BUILDING AND ITS OCCUPANTS DURING THE CONSTRUCTION PERIOD.
D. KEEP PUBLIC AREAS SUCH AS HALLWAYS, STAIRS, AND ELEVATOR LOBBIES FREE FROM ACCUMULATION OF WASTE MATERIAL, RUBBISH, OR CONSTRUCTION DEBRIS.
E. SANITARY FACILITIES:
   1. PROVIDE AND MAINTAIN REQUIRED SANITARY FACILITIES AND ENCLOSURES FOR USE BY PERSONNEL OF CONTRACTOR AND CONTRACTOR'S SUBCONTRACTORS AND SUPPLIERS. COORDINATE LOCATION WITH OWNER.
   2. SANITARY FACILITIES SHALL MEET GOVERNING LAWS AND REGULATIONS.
   3. PROVIDE FACILITIES AT TIME OF MOBILIZATION.
   4. CONTRACTOR'S PERSONNEL MAY NOT USE OWNER'S EXISTING SANITARY FACILITIES.
   5. AT END OF CONSTRUCTION PERIOD, RETURN EXISTING FACILITIES USED DURING CONSTRUCTION PERIOD TO SAME OR BETTER CONDITION AS ORIGINAL CONDITION.
   6. SERVICE, CLEAN, AND MAINTAIN FACILITIES AND ENCLOSURE.

ACCESS

A. CONTRACTOR IS RESPONSIBLE FOR COMPLYING WITH OWNER'S REQUIREMENTS REGARDING VEHICULAR ACCESS.
B. ACCESS TO THE JOB SITE OVER OWNER'S EXISTING ROADS, SHALL BE ARRANGED BETWEEN CONTRACTOR AND OWNER.
C. MAINTAIN FREE AND UNIMPEDED ACCESS FOR EMERGENCY VEHICLES TO INGRESS/ENTER AND EGRESS/EXIT FROM SITE AT ALL TIMES.
D. SUBMIT TO OWNER FOR REVIEW AND APPROVAL PRIOR TO PERFORMING CONSTRUCTION WORK, WHICH ALTERS ACCESS BY EMERGENCY AGENCIES.
E. MAINTAIN FREE AND UNIMPEDED ACCESS TO FIRE HYDRANTS AND CONTROL VALVES.
F. WHENEVER INTERFERENCE WITH NORMAL STREET AND SIDEWALK TRAFFIC BECOMES NECESSARY FOR PROPER AND CONVENIENT PERFORMANCE OF WORK, AND NO SATISFACTORY DETOUR ROUTE EXISTS, BEFORE BEGINNING THE INTERFERENCE PROVIDE SATISFACTORY DETOUR, TEMPORARY BRIDGE, OR OTHER PROPER FACILITY, INCLUDING SIGNAGE, FOR TRAFFIC TO PASS AROUND OR OVER INTERFERENCE, AND MAINTAIN IN SATISFACTORY CONDITION AS LONG AS INTERFERENCE CONTINUES.
G. KEEP EXISTING DRIVEWAYS AND ENTRANCES SERVING THE PREMISES CLEAR AND AVAILABLE TO OWNER'S PERSONNEL AT ALL TIMES. DO NOT USE THESE AREAS FOR PARKING OR STORAGE OF MATERIALS.
H. PROVIDE RAMPS, STAIRS, LADDERS, AND SIMILAR TEMPORARY ACCESS ELEMENTS AS REQUIRED TO PROPERLY EXECUTE THE WORK AND TO PERMIT INSPECTIONS. WHEN PERMANENT ACCESS PROVISIONS ARE AVAILABLE, COVER FINISHED SURFACES WITH SUFFICIENT PROTECTION TO ENSURE FREEDOM FROM DAMAGE.

TIME RESTRICTIONS FOR PERFORMING WORK

A. DEFINITIONS:
   1. WORKING HOURS: ASSUME WORK WILL BE PERFORMED DURING NORMAL WORKING HOURS, EXCEPT WHERE NOTED OR SPECIFIED AS RESTRICTED WORKING HOURS.
   2. OCCUPIED ROOMS OR OCCUPIED AREAS: DEFINED AS SPACE OUTSIDE OF CONSTRUCTION BARRICADES, INCLUDING PUBLIC CORRIDORS AND ELEVATOR LOBBIES.
B. SITE CONDITIONS: ADJACENT OCCUPIED AREAS WILL REMAIN IN OPERATION DURING THE PERIOD OF CONSTRUCTION.
C. SCHEDULING:
   1. WORK IN OCCUPIED AREAS, OR WORK ABOVE, OR BELOW, CEILING SPACES, OR ADJACENT TO OCCUPIED AREAS, IS TO BE DONE DURING RESTRICTED WORKING HOURS AND ARE TO BE SCHEDULED A MINIMUM OF 7 WORKING DAYS IN ADVANCE WITH OWNER.
   2. SERVICE SHUTDOWNS: COMPLY WITH REQUIREMENTS OF THIS ARTICLE AND INTERRUPTION OF BUILDING SERVICES ARTICLE IN THIS SECTION.
D. RESTRICTED WORKING HOURS:
   1. DUE TO SENSITIVE OPERATIONS IN ADJOINING AREAS, RESTRICTED WORKING HOURS WILL BE ENFORCED.
   2. BEFORE COMMENCING WITH THE WORK, VERIFY THE FOLLOWING RESTRICTED WORKING HOURS WITH OWNER:
      A. NO WORK MAY BE PERFORMED BETWEEN THE HOURS OF 7:00 PM AND &7:AM UNLESS OTHERWISE SCHEDULED WITH OWNER.
      B. DEBRIS REMOVAL: 10:00 P.M. TO 6:00 A.M.
      C. NOISY ACTIVITIES, INCLUDING DRILLING: 5:00 A.M. TO 7:00 A.M.
      D. ERECTING AND REMOVING BARRIERS: 10:00 P.M. TO 6:00 A.M.
      E. WORK IN PUBLIC CORRIDORS AND ELEVATOR LOBBIES: TO BE SCHEDULED WITH OWNER.
      F. SHUTDOWNS: EVENING HOURS, AS SCHEDULED WITH OWNER.

INTERRUPTION OF BUILDING SERVICES

A. PERFORM SHUTDOWNS AS SPECIFIED IN TIME RESTRICTION FOR PERFORMING WORK ARTICLE OF THIS SECTION.
B. OBTAIN APPROVAL OF OWNER IN WRITING, USING OWNER PROVIDE FORM, FOR A UTILITY OR EQUIPMENT SHUTDOWN NOT LESS THAN 10 WORKING DAYS BEFORE SHUTDOWN IS DESIRED.
C. WORK IN OCCUPIED AREAS, OR WORK ABOVE, OR BELOW, CEILING SPACES, OR ADJACENT TO OCCUPIED AREAS, IS TO BE DONE DURING RESTRICTED WORKING HOURS AND ARE TO BE SCHEDULED A MINIMUM OF 7 CALENDAR DAYS IN ADVANCE WITH OWNER.
D. INTERRUPTION OF BUILDING SERVICES AND LIFE SAFETY SHUTDOWNS ARE TO BE DONE DURING RESTRICTED WORKING HOURS AND ARE TO BE SCHEDULED A MINIMUM OF 14 CALENDAR DAYS IN ADVANCE WITH OWNER.
E. PLAN WORK TO MINIMIZE SHUTDOWN TIME OF ANY SERVICE.
F. COORDINATE SHUTDOWNS CLOSELY WITH ARCHITECT. OPERATION OF EXISTING VALVES, SWITCHES, OR OTHER MEANS TO AFFECT SHUTDOWN, WILL BE BY OWNER'S PERSONNEL.

CORE DRILLING AND CUTTING

A. PROVIDE DRILLING AND CUTTING REQUIRED FOR THIS INSTALLATION. SCHEDULE WORK IN ADVANCE TO MINIMIZE CORE DRILLING AND CUTTING.
B. SECURE OWNER'S APPROVAL OF LOCATIONS FOR HOLES AND OPENINGS IN FLOORS, WALLS, AND CEILINGS NECESSARY FOR INSTALLATION OF MECHANICAL EQUIPMENT, DUCTS, PIPING AND APPURTENANCES, AND KEEP SIZES OF SUCH HOLES AND OPENINGS TO A MINIMUM. CONDUCT OPERATIONS IN SUCH MANNER AS TO PREVENT CRACKING OR OTHERWISE DAMAGING FLOORS, WALLS AND CEILINGS. CLOSE HOLES AND OPENINGS, AND REPAIR, IN AN APPROVED MANNER, DAMAGES RESULTING FROM THESE OPERATIONS, LEAVING NO IMPAIRMENT OF STRUCTURAL, FUNCTIONAL, OR ARCHITECTURAL QUALITY AND MATCH CONFIGURATION, TEXTURE AND COLOR OF ADJACENT SURFACES.
C. HOLES AND OPENINGS IN OR THROUGH EXISTING CONCRETE OR MASONRY FLOORS, WALLS AND CEILINGS, SHALL BE MADE BY DRILLING WITH PROPER SIZE CARBOLOY–TIPPED TWIST DRILLS, DIAMOND DRILL BIT, OR DIAMOND CORE DRILLS. IMPACT DRILLS OF ANY TYPE ARE NOT PERMITTED.
D. BEFORE DRILLING ANY HOLES, REVIEW STRUCTURAL DRAWINGS FOR LOCATIONS OF STRUCTURAL REINFORCEMENT. EXERCISE EXTREME CAUTION SO AS NOT TO DAMAGE STRUCTURE DURING DRILLING.
E. ANY PENETRATIONS OF THE ROOF NEED TO BE COORDINATED WITH OWNER.

SMOKING POLICY

A. OWNER HAS ADOPTED A NO–SMOKING PROVISION IN ALL BUILDINGS. CONTRACTOR, HIS FORCES, AND HIS EMPLOYEES WILL OBSERVE THIS REQUIREMENT WHILE PERFORMING WORK IN OWNER'S BUILDINGS.

PUBLICITY RELEASES

A. DO NOT RELEASE ANY INFORMATION, STORY, PHOTOGRAPH, PLAN, OR DRAWINGS RELATING INFORMATION ABOUT THE PROJECT TO ANYONE, INCLUDING PRESS OR OTHER PUBLIC COMMUNICATION MEDIUM WITHOUT OWNER'S WRITTEN PERMISSION.

SITE DECORUM

A. CONTRACTOR SHALL CONTROL THE CONDUCT OF ITS EMPLOYEES SO AS TO PREVENT UNWANTED INTERACTION INITIATED BY CONTRACTOR'S EMPLOYEES WITH OWNER'S EMPLOYEES, VISITORS, AND OTHER INDIVIDUALS (EXCEPT THOSE ASSOCIATED WITH THE PROJECT). REFERENCE TO CONTRACTOR'S EMPLOYEES INCLUDES CONTRACTOR'S SUBCONTRACTORS AND THEIR EMPLOYEES.
B. WITHOUT LIMITATION, UNWANTED INTERACTION WOULD BE WHISTLING AT OR INITIATING CONVERSATION WITH PASSERBY. FURTHER, CONTRACTOR SHALL CONTROL CONDUCT OF ITS EMPLOYEES AS TO PREVENT INAPPROPRIATE CONVERSATIONS AND USE OF INAPPROPRIATE LANGUAGE ON THE JOB SITE.
C. IN THE EVENT THAT ANY CONTRACTOR'S EMPLOYEE INITIATES UNWANTED INTERACTION OR IS HEARD IN AN INAPPROPRIATE CONVERSATION OR USING INAPPROPRIATE LANGUAGE, CONTRACTOR SHALL, WHETHER UPON REQUEST OF OWNER OR ON ITS OWN INITIATIVE, REPLACE SAID EMPLOYEE WITH ANOTHER OF EQUIVALENT TECHNICAL SKILL, AT NO ADDITIONAL COST TO THE OWNER.

MISCELLANEOUS RESTRICTIONS

DO NOT ALLOW CAMERAS OR PHOTOGRAPHS ON SITE WITHOUT OWNER'S WRITTEN APPROVAL, EXCEPT AS REQUIRED FOR CONSTRUCTION PHOTOGRAPHS.

SELECTIVE DEMOLITION

A. COORDINATION:
   1. COORDINATE UTILITY AND BUILDING SERVICES INTERRUPTIONS WITH OWNER.
   2. COORDINATE WORK TO ENSURE FIRE SPRINKLERS, FIRE ALARMS, SMOKE DETECTORS, EMERGENCY LIGHTING, EXIT SIGNS AND OTHER LIFE SAFETY SYSTEMS REMAIN IN FULL OPERATION IN OCCUPIED AREAS.
B. SEQUENCING:
   1. SEQUENCE OPERATIONS TO MAINTAIN SAFE WORKING CONDITIONS AND PRESERVE EXISTING WORK THAT IS TO REMAIN.
   2. SEQUENCE DEMOLITION SO AS NOT TO UNDERMINE OR COMPROMISE VERTICAL AND LATERAL LOAD CARRYING CAPACITY OF STRUCTURES THAT ARE TO REMAIN.
C. SCHEDULING:
   1. SCHEDULE WORK AT OWNER'S CONVENIENCE TO CAUSE MINIMAL INTERFERENCE WITH OWNER'S NORMAL OPERATIONS.
   2. SCHEDULE UTILITY AND BUILDING SERVICES INTERRUPTIONS WITH OWNER.
      A. DO NOT DISABLE OR DISRUPT BUILDING FIRE OR LIFE SAFETY SYSTEMS WITHOUT THREE DAYS PRIOR WRITTEN NOTICE TO OWNER.
      B. SCHEDULE TIE–INS TO EXISTING SYSTEMS TO MINIMIZE DISRUPTION.
         3. COOPERATE WITH OWNER IN SCHEDULING NOISY, DIRTY, OR WET WORK.
         4. COOPERATE WITH OWNER IN SCHEDULING WASTE REMOVAL THAT MAY IMPACT OWNERS OPERATIONS.
         5. OBTAIN OWNER'S APPROVAL OF TIMES SCHEDULED FOR JACK HAMMERING.

SUBMITTALS

A. DEMOLITION SCHEDULE: INDICATE OVERALL SCHEDULE AND INTERRUPTIONS REQUIRED FOR UTILITY AND BUILDING SERVICES.
B. PROGRAM OF METHODS FOR ACCOMPLISHING THIS WORK.
C. EXISTING BUILDING DOCUMENTATION: SUBMIT THE FOLLOWING FOR EXISTING CONDITIONS INDICATED TO REMAIN.
   1. REPORT OF INSPECTIONS CONDUCTED WITH OWNER BOTH BEFORE AND AFTER PERFORMING WORK.
   2. SURVEY INDICATING POSITION AND ELEVATION OF EXISTING CONDITION FEATURES.
   3. PHOTOGRAPHIC SURVEY INDICATING CONDITIONS BEFORE, DURING, AND AFTER DEMOLITION WORK.

QUALITY ASSURANCE

A. REQUIREMENTS OF REGULATORY AGENCIES:
   1. PERFORM WORK IN ACCORDANCE WITH RULES AND REGULATIONS OF STATE AND LOCAL AGENCIES HAVING JURISDICTION FOR DEMOLITION OF STRUCTURES, SAFETY OF ADJACENT STRUCTURES, DUST CONTROL, RUNOFF CONTROL, AND DISPOSAL OF DEBRIS.
   2. CONFORM TO RULES AND REGULATIONS OF STATE AND LOCAL AGENCIES HAVING JURISDICTION WHEN HAZARDOUS OR CONTAMINATED MATERIALS ARE DISCOVERED.

SITE CONDITIONS

A. CONDUCT DEMOLITION AND DEBRIS REMOVAL OPERATIONS WITH MINIMUM INTERFERENCE TO PUBLIC OR PRIVATE ACCESS. MAINTAIN PROTECTED EGRESS ANDS ACCESS FROM BUILDING AT ALL TIMES.
B. CEASE DEMOLITION IMMEDIATELY IF STRUCTURES APPEAR TO BE IN DANGER. NOTIFY OWNER. DO NOT RESUME OPERATIONS UNTIL DIRECTED.
C. WHERE EXISTING CONDITIONS CONFLICT WITH REPRESENTATIONS OF THE CONTRACT DOCUMENTS, NOTIFY ARCHITECT AND OBTAIN CLARIFICATION. SEE ALSO INSPECTION REQUIREMENTS UNDER EXISTING BUILDING DOCUMENTATION ARTICLE. DO NOT PERFORM WORK AFFECTING THE CONFLICTING CONDITIONS UNTIL CLARIFICATION OF THE CONFLICT IS RECEIVED.

HAZARDOUS MATERIALS:

1. IT IS NOT EXPECTED THAT HAZARDOUS MATERIALS WILL BE ENCOUNTERED IN THE WORK.
2. HAZARDOUS MATERIALS ARE EXCLUDED FROM WORK OF THIS SECTION. IMMEDIATELY INFORM OWNER IF HAZARDOUS MATERIALS ARE ENCOUNTERED OR SUSPECTED AND STOP WORK IN SUSPECT AREA. DO NOT PROCEED WITH WORK IN SUSPECTED AREA UNTIL APPROVED BY OWNER.

EXISTING BUILDING DOCUMENTATION

A. BEFORE PERFORMANCE OF WORK, MAKE INSPECTION AND REPORT DEFECTS AND STRUCTURAL WEAKNESSES OF STRUCTURES TO BE PARTIALLY DEMOLISHED, CUT, OR REMOVED, OF ADJACENT STRUCTURES, AND OF IMPROVEMENTS REMAINING.
B. AFTER PERFORMANCE OF WORK, MAKE INSPECTION AND DOCUMENT CONDITIONS INCLUDING DEFECTS AND STRUCTURAL WEAKNESSES OF:
   1. STRUCTURES PARTIALLY DEMOLISHED, CUT, OR REMOVED.
   2. IMPROVEMENTS INDICATED TO REMAIN.
C. OWNER WILL ACCOMPANY CONTRACTOR BEFORE AND AFTER PERFORMANCE OF WORK TO CONFIRM PHYSICAL CONDITION OF EXISTING STRUCTURES OR IMPROVEMENTS INDICATED TO REMAIN.

EXAMINATION

A. REVIEW PROJECT RECORD DOCUMENTS OF EXISTING CONSTRUCTION PROVIDED BY OWNER DOES NOT GUARANTEE THAT EXISTING CONDITIONS ARE SAME AS THOSE INDICATED IN PROJECT RECORD DOCUMENTS.
B. DETERMINE WHERE REMOVALS MAY RESULT IN STRUCTURAL DEFICIENCY OR UNPLANNED BUILDING COLLAPSE DURING DEMOLITION. COORDINATE DEMOLITION SEQUENCE AND PROCEDURES TO PREVENT STRUCTURES FROM BECOMING UNSTABLE.
C. DETERMINE WHERE DEMOLITION MAY AFFECT STRUCTURAL INTEGRITY OR WEATHER RESISTANCE OF ADJACENT BUILDINGS INDICATED TO REMAIN.
   1. IDENTIFY MEASURES REQUIRED TO PROTECT BUILDINGS FROM DAMAGE.
   2. IDENTIFY REMEDIAL WORK INCLUDING PATCHING, REPAIRING, BRACING, AND OTHER WORK REQUIRED TO LEAVE BUILDINGS INDICATED TO REMAIN IN STRUCTURALLY SOUND AND WEATHERTIGHT AND WATERTIGHT CONDITION.
D. VERIFY HAZARDOUS MATERIAL ABATEMENT IS COMPLETE BEFORE BEGINNING DEMOLITION.
E. EXAMINE AREAS AFFECTED BY WORK OF THIS SECTION AND VERIFY FOLLOWING:
   1. DISCONNECTION OF UTILITIES AS REQUIRED.
   2. THOSE UTILITIES SERVING OCCUPIED PORTIONS OF BUILDINGS WILL NOT BE DISTURBED.
   3. REMOVAL BY OWNER OF OWNER'S PERSONAL PROPERTY, MOVABLE FURNITURE, AND EQUIPMENT ITEMS NOT DESIGNATED FOR RELOCATION.
F. WHEN UNANTICIPATED MECHANICAL, ELECTRICAL, OR STRUCTURAL ELEMENTS ARE ENCOUNTERED, INVESTIGATE AND MEASURE THE NATURE AND EXTENT OF THE ELEMENT. PROMPTLY SUBMIT A WRITTEN REPORT TO OWNER.

   EXISTING UTILITIES:
   1. NOTIFY AFFECTED UTILITY COMPANIES BEFORE STARTING WORK AND COMPLY WITH THEIR REQUIREMENTS.
   2. MARK LOCATION AND TERMINATION OF UTILITIES.
   3. REFER TO DIVISIONS 21, 22, 23, 25, 26, 27, AND 28 SECTIONS FOR SHUTTING OFF, DISCONNECTING, REMOVING, AND SEALING OR CAPPING MECHANICAL OR ELECTRICAL UTILITIES.
   4. DO NOT START DEMOLITION WORK UNTIL UTILITY DISCONNECTION AND SEALING HAVE BEEN COMPLETED AND VERIFIED IN WRITING.
   5. TAKE CARE TO ENSURE THAT UTILITIES TO REMAIN AND PORTIONS THEREOF WHICH ARE NOT REQUIRED TO BE DEMOLISHED OR REMOVED.
   6. LOCATE, IDENTIFY, DISCONNECT, AND SEAL OR CAP OFF INDICATED UTILITIES SERVING AREAS TO BE DEMOLISHED.
   7. LOCATE, IDENTIFY, AND PROTECT KNOWN UTILITIES INDICATED TO REMAIN FROM DAMAGE. SHOULD DAMAGE OCCUR, NOTIFY ARCHITECT AND REPAIR AT NO ADDITIONAL COST TO THE CONTRACT.
   8. VERIFY THAT THOSE UTILITIES SERVING OCCUPIED PORTIONS OF BUILDINGS WILL NOT BE DISTURBED.
H. PROTECT EXISTING IMPROVEMENTS INDICATED TO REMAIN FROM DAMAGE DURING DEMOLITION.
I. LOCATE, IDENTIFY, AND PROTECT KNOWN UTILITIES INDICATED TO REMAIN FROM DAMAGE. SHOULD DAMAGE OCCUR, NOTIFY ARCHITECT AND REPAIR AT NO ADDITIONAL COST TO THE CONTRACT.

DEMOLITION REQUIREMENTS

A. DISPOSITION OF EXISTING IMPROVEMENTS:
   1. MATERIALS FORMING PORTIONS OF PERMANENT STRUCTURE DESIGNATED FOR DEMOLITION SHALL BECOME CONTRACTOR'S PROPERTY, AND CONTRACTOR SHALL BE RESPONSIBLE FOR THEIR REMOVAL UNLESS OTHERWISE NOTED.
   2. PERSONAL PROPERTY AND MOVABLE FURNITURE REMAIN OWNER'S PROPERTY. CONTRACTOR TO STORE ITEMS IN FUTURE STORAGE AREA AND PROTECT FROM DAMAGE. CONSIDER ITEMS NOT CLAIMED BY OWNER AS DEBRIS. OWNER'S FINAL VERIFICATION IS REQUIRED BEFORE REMOVAL.
B. SPRINKLE OR WET DOWN WORK AND AREAS AFFECTED BY THIS WORK AS REQUIRED TO PREVENT DUST AND DIRT FROM RISING. PROVIDED HOSES AND WATER CONNECTIONS REQUIRED FOR THIS PURPOSE.

DEMOLITION

A. PERFORM WORK IN ACCORDANCE WITH ANSI A10.6 UNLESS OTHERWISE NOTED.
B. CONDUCT DEMOLITION TO MINIMIZE INTERFERENCE WITH ADJACENT AND OCCUPIED BUILDING AREAS.
C. MAINTAIN PROTECTED EGRESS FROM AND ACCESS TO ADJACENT EXISTING BUILDINGS AT ALL TIMES.
D. DISCONNECT, CAP, AND IDENTIFY DESIGNATED UTILITIES WITHIN DEMOLITION AREAS. CAP AND IDENTIFY ABANDONED UTILITIES AT TERMINATION POINTS WHEN UTILITY IS NOT COMPLETELY REMOVED. ANNOTATE RECORD DRAWINGS INDICATING LOCATION AND TYPE OF SERVICE FOR CAPPED UTILITIES REMAINING AFTER DEMOLITION
E. REMOVE DESIGNATED INTERIOR STRUCTURES, PARTS, AND FINISHES AT BEGINNING OF WORK TO MINIMIZE HAZARDOUS WORKING CONDITIONS AND TO PROVIDE COMPARATIVELY CLEAN SURFACES FOR INSTALLATION OF NEW WORK.
F. PERFORM DEMOLITIONS AS MUCH AS POSSIBLE WITH SMALL TOOLS. DEMOLISH IN SMALL SECTIONS. REMOVE LOADING BEFORE CUTTING OR REMOVING STRUCTURAL MEMBERS/
G. DEMOLISH IN AN ORDERLY AND CAREFUL MANNER. PROTECT EXISTING SUPPORTING STRUCTURAL MEMBERS.
H. CONCRETE:
   1. DEMOLISH BY MEANS OF SAW CUTTING, DRILLING, CHIPPING, BREAKING, OR A COMBINATION THEREOF, AS INDICATED OR REQUIRED TO SATISFACTORY ACCOMPLISH THE WORK WITHOUT DAMAGE TO EXISTING IMPROVEMENTS NOT BEING REMOVED.
   2. DEMOLISH CONCRETE AND MASONRY IN SMALL SECTIONS, LESS THAN 3 FEET IN ANY DIRECTION.
   3. CUT CONCRETE AT NEAREST CONTROL JOINT TO LINE SHOWN ON THE DRAWINGS, SO THAT NEW CONCRETE CAN BE INSTALLED CONTINUING THE ADJACENT EXISTING JOINT PATTERN.
I. AT CONCRETE AND OTHER MATERIALS WHERE EDGES OF CUTS AND HOLES WILL REMAIN EXPOSED IN THE COMPLETED WORK, MAKE CUTS USING POWER–SAWING AND –CORING EQUIPMENT. DO NOT OVER CUT AT CORNERS OF CUT OPENINGS.
J. WHERE EXISTING RESILIENT FLOORING, CARPETING, CARPET PADDING, TILE AND OTHER SIMILAR ADHESIVE OR MORTAR APPLIED FINISHES ARE REQUIRED TO BE REMOVED TO PERMIT APPLICATION OF NEW FINISHES, GRIND, STONE, SAND OR OTHERWISE REMOVE ALL ADHESIVES, MORTAR, FASTENERS, AND SIMILAR MATERIALS TO THE EXTENT THAT NO RIDGES, LUMPS OR OTHER PROTRUSIONS WILL TELEGRAPH THROUGH SURFACE OF NEW FINISH OR BE APPARENT WHEN THE SUBSTRATE IS LEFT EXPOSED.
K. REMOVE TEMPORARY WORK.

CUTTING

A. CUTTING OF CONCRETE SHALL BE MADE CLEAN AND NEAT.
B. DO NOT CUT OR ALTER STRUCTURAL MEMBERS UNLESS INDICATED TO DO SO ON DRAWINGS OR WRITTEN APPROVAL IS RECEIVED FROM ARCHITECT.
C. TAKE CARE NOT TO DAMAGE REINFORCING OR STRUCTURAL STEEL SCHEDULED TO REMAIN IN PLACE.

REMOVAL OF DEBRIS

A. REMOVE DEMOLISHED MATERIALS FROM SITE EXCEPT WHERE SPECIFICALLY NOTED OTHERWISE.
B. REMOVE MATERIALS AS WORK PROGRESSES. UPON COMPLETION OF WORK, LEAVE AREAS IN CLEAN CONDITION.
C. REMOVE DEBRIS AS THEY ACCUMULATE. DO NOT PERMIT PRESENCE OF DEBRIS TO DELAY PROGRESS OF RELATED WORK.
D. REMOVE MATERIALS IN A MANNER TO PREVENT SPILLAGE.
E. NOTHING TO BE REMOVED FROM SITE SHALL BE STORED, SOLD, BURNED, OR BURIED ON SITE.

REPAIRS

A. PROMPTLY REPAIR DAMAGE TO ADJACENT CONSTRUCTION CAUSED BY DEMOLITION OPERATIONS.
B. WHERE REPAIRS TO EXISTING SURFACES ARE REQUIRED, PATCH TO RESTORE SURFACE TO ORIGINAL OR BETTER CONDITION.
C. RESTORE EXPOSED FINISHES OF PATCHED AREAS AND EXTEND RESTORATION INTO ADJOINING CONSTRUCTION IN A MANNER THAT ELIMINATES EVIDENCE OF PATCHING AND REFINISHING.

CLEANING

A. CLEAN ADJACENT IMPROVEMENTS SCHEDULED TO REMAIN OF DUST, DIRT, AND DEBRIS CAUSED BY DEMOLITION OPERATIONS. RETURN ADJACENT AREAS TO CONDITION EXISTING BEFORE BUILDING DEMOLITION OPERATIONS BEGAN.
B. SITE TO BE MAINTAINED IN A NEAT & ORDERLY MANNER AT ALL TIMES. REMOVE DEBRIS AND BROOM SWEEP AT LEAST DAILY.

Cuschieri Horton Architects
1475 S. Bascom Ave. Suite 204
Campbell, California 95008
408.371.8200 Fx 408.371.8201

LICENSED ARCHITECT
DANIEL ANTHONY CUSCHIERI
C–34957
JAN 31 2021
RENEWAL DATE
STATE OF CALIFORNIA

GENERAL NOTES

TOWN OF LOS GATOS
ENGINEERING BUILDING TI ~~AND STORAGE BUILDING~~
41 MILES AVENUE,
LOS GATOS, CA 95030

REVIEWS

NO.	ITEM	DATE

PERMIT #:

SUBMITTAL:
CITY SUBMITTAL SET

DRAWN BY: SG
CHECKED BY: RB
JOB NO: 1826
DATE: 12/04/19

SHEET NO.
T1.2

8/11/2020 8:34 AM

GRAPHIC SYMBOLS

1. GRAPHIC SYMBOLS REPRESENT OBJECTS, ELEMENTS, EQUIPMENT, INSTRUCTIONS, LOCATION, CONVENTIONS, ETC. THEY DO NOT REPRESENT THE SHAPE, SIZE, DIMENSION OF THE ACTUAL OBJECT.
2. EACH DRAWING GROUP (IE. MECHANICAL, ELECTRICAL) HAS ITS OWN SYMBOLS, ABBREVIATIONS, LEGEND AND NOTES. THE INFORMATION AND SYMBOLS ON THIS DRAWING ARE TYPICAL AND APPLY TO ALL ARCHITECTURAL DRAWINGS. NOT ALL SYMBOLS OR ACCESSORIES MAY BE USED WITHIN THIS SET OF DOCUMENTS.

GENERAL SYMBOLS

- SECTION — DIRECTION SECTION WAS TAKEN; SECTION IDENTIFICATION; SHEET WHERE SECTION IS DRAWN (1 / A6.00)
- DETAIL — DETAIL IDENTIFICATION; SHEET WHERE DETAIL IS DRAWN (1 / A9.00)
- GROUP OF INTERIOR ELEVATIONS — ELEVATION IDENTIFICATION; ELEVATION SHOWN IN THIS DIRECTION; SHEET WHERE ELEVATION IS DRAWN (1 / A8.0)
- SINGLE INTERIOR ELEVATION — DIRECTION OF ELEVATION; SHEET WHERE ELEVATION IS DRAWN (2 / A8.0); ELEVATION IDENTIFICATION
- ROOM IDENTIFICATION — ROOM NAME (ROOM NAME); ROOM NUMBER (101); S.F. OR OTHER RM. NOTATION (100 S.F.)
- SPECIFIC NOTE (1)
- DOOR DESIGNATION (100)
- WINDOW DESIGNATION (1)
- CEILING HEIGHT (8'–0")
- REVISION — CLOUD AROUND REVISION; REVISION NO. (1)
- EQUIPMENT DESIGNATION — INDICATES MECHANICAL, ELECTRICAL, PLUMBING, OR STRUCTURAL COORDINATION REQUIRED; EQUIPMENT IDENTIFICATION
- WALL TYPE (W1)
- TACTILE SIGNAGE DESIGNATION (A); TACTILE SIGNAGE TYPE. SEE 9/A9.3 (A)
- TOILET OR WALL ACCESSORY TYPE AND FINISH (1A)

EQUIPMENT

- RH — ROBE HOOK
- CLOCK
- FIRE EXTINGUISHER CABINET, VALVE BOX, ELECT. PANEL, RECESSED TOILET ACCESSORY, ETC. SEE PLANS AND INT. ELEV.
- GRAB BAR
- WALL GUARD OR CHAIR RAIL, SEE PLANS AND INT. ELEV.
- EMERGENCY EYEWASH/SHOWER
- CORNER GUARD
- EDGE GUARD

EXISTING WALLS

- (E) WALL TO REMAIN

NEW PARTITION TYPES

- SEE FLOOR PLAN

DOORS AND WINDOWS

- NEW DOORS FLOOR FINISH TRANSITION WHERE INDICATED AT CENTER LINE OF DOOR, TYPICAL.
- NEW WINDOW, SEE WINDOW SCHEDULE

PLUMBING

- FLOOR MOUNTED TOILET WITH TANK
- FLOOR MOUNTED TOILET
- (N) FLOOR CLEAN OUT, (FCO) SEE PLUMBING PLANS FOR LOCATIONS (N) INDICATES NEW FCO (E) INDICATES EXISTING FCO
- FLOOR SINK PROVIDE COVER WHERE EXPOSED TO FOOT TRAFFIC
- FLOOR DRAIN PROVIDE COVER WHERE EXPOSED TO FOOT TRAFFIC

CASEWORK

- WALL HUNG CABINETS OR SHELVES
- BASE CABINET COUNTER TOP
- N.I.C. — OWNER FURNISHED ITEMS (NOT IN CONTRACT)
- UPPER CABINET CASEWORK AT CEILING

REFLECTED CEILING

- ACOUSTICAL CEILING SYSTEM
- GYP. BD. CEILING
- 2' X 4' FLUORESCENT LIGHT FIXTURE, SEE ELEC. DWGS.
- 2' X 2' FLUORESCENT LIGHT FIXTURE, SEE ELEC. DWGS.
- EMERGENCY 2' X 4' FLUORESCENT LIGHT FIXTURE, SEE ELEC. DWGS.
- SURFACE MOUNTED FLUORESCENT LIGHT FIXTURE, SEE ELEC. DWGS.
- SUSPENDED FLUORESCENT LIGHT FIXTURE, SEE ELEC. DWGS.
- RECESSED LIGHT FIXTURE, SEE ELEC. DWGS.
- EF — EXHAUST FAN
- OS — OCCUPANCY SENSOR, CEILING MOUNTED
- LIGHTED EXIT SIGN, WALL MOUNTED
- LIGHTED EXIT SIGN, CEILING MOUNTED
- RECESSED CEILING MOUNTED WALL WASHER
- ROOF ACCESS HATCH AND LADDER
- SD — SMOKE DETECTOR
- FIRE SPRINKLER HEAD
- D — UNDER CABINET LIGHTING
- CURTAIN TRACK

MECHANICAL

- SUPPLY DIFFUSER
- RETURN AIR GRILLE
- EXHAUST GRILLE

ELECTRICAL

- DUPLEX OUTLET
- DEDICATED OUTLET, ORANGE
- FOURPLEX OUTLET
- DEDICATED FOURPLEX, ORANGE
- 220 VOLT OUTLET
- J — J–BOX WITH POWER
- VOICE PULL STRING & RING
- VOICE/DATA PULL STRING & RING
- DATA PULL STRING & RING
- GARBAGE DISPOSAL SWITCH
- FF — WALL MOUNTED FURNITURE FEED 4"X4" BOX, S.S. COVERPLATE
- V — WALL MOUNTED VOICE/DATA, 4"X4" BOX, PULL STRING & RING, S.S. COVERPLATE
- PB — PUSH BUTTON FOR AUTOMATIC DOOR OPENER
- DB — DOOR BELL
- CH — CHIME
- TV — TV/MONITOR PULL STING & RING
- RS — ROOM STATION (CALL CORD)
- CL — CORRIDOR LIGHT
- CE — CALL EMERGENCY DEVICE
- DS — DUTY STATION BUZZER
- ES — EMERGENCY STATION DEVICE (PULL CORD)
- AP — ANNUCIATOR PANEL, 5'–0" TO BOTTOM
- RO — R.O. ALARM, LOW VOLTAGE LINE FROM R.O. EQUIPMENT IN WATER ROOM. 5'–0" TO BOTTOM.
- +48 — WALL DEVICE AT HEIGHT INDICATED A.F.F.
- FLOOR–LEVEL EXIT SIGN (ARROWS INDICATE EXIT DIRECTION
- FLUSH FLOOR MOUNTED DUPLEX OUTLET
- FLUSH FLOOR MOUNTED VOICE/DATA OUTLET

STANDARD MOUNTING HEIGHTS

NOTE: THESE SYMBOLS ARE INTENDED TO SHOW MOUNTING HEIGHTS AND LOCATIONS ONLY. ACTUAL EQUIPMENT AND ACCESSORIES SIZES, TYPES, AND QUANTITIES MAY VARY ON PLANS.

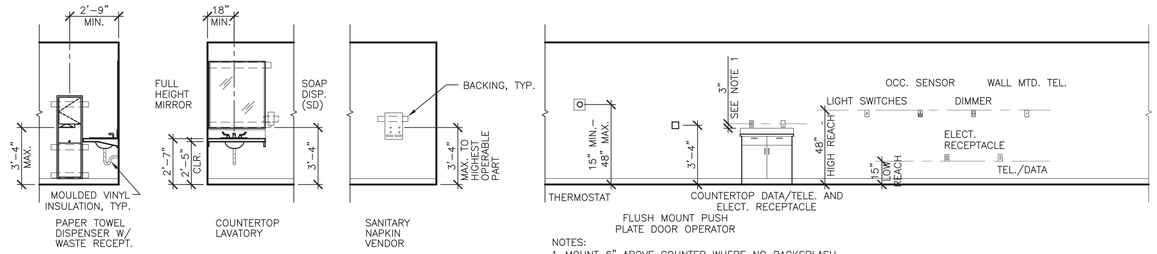

SEE FLOOR PLANS FOR SPECIFIC TOILET ROOM CONFIGURATIONS. PROVIDE SOLID BACKING AT ALL WALL HUNG ACCESSORIES. CONFIRM BACKING LOCATION WITH MANUFACTURER'S RECOMMENDATIONS, TYP.

NOTES:
1. MOUNT 6" ABOVE COUNTER WHERE NO BACKSPLASH OCCURS

TYPICAL LAVATORY AND ACCESSORIES

CONTROLS

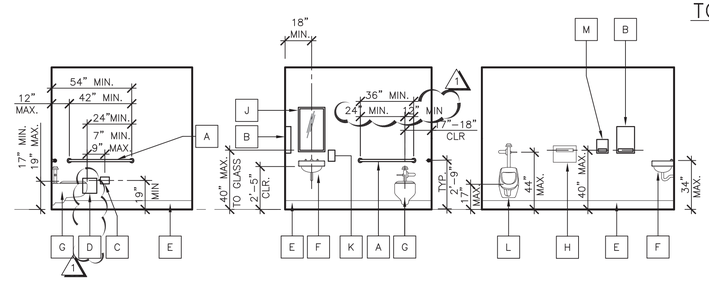

TOILET NOTES:

RESTROOM ACCESSORIES TO BE BOBRICK, TYPICAL

- A — GRAB BAR (36" BEHIND TOILET AND 42" ON THE SIDE).
- B — PAPER TOWEL DISPENSER
- C — TOILET PAPER DISPENSER
- D — SANITARY NAPKIN DISPOSAL UNIT. OPERABLE PORTIONS OF DISPOSAL UNIT TO CLEAR GRAB BAR AND TO BE AT 30" MAX. A.F.F.
- E — BASE, SEE FINISH SCHEDULE
- F — SINK (PROVIDE INSULATION AT EXPOSED PIPING BELOW SINK) SEE PLUMBING DRAWINGS.
- G — TOILET, SEE PLUMBING DRAWINGS
- H — SEAT COVER DISPENSER
- J — MIRROR ABOVE SINK, TYP.
- K — SOAP DISPENSER. LOCATE ABOVE SINK OR COUNTER WHEN POSSIBLE
- L — URINAL
- M — FEMININE NAPKIN DISPENSER

TYPICAL TOILET RM. MOUNTING HEIGHTS

PROVIDE SOLID BACKING FOR ALL WALL HUNG ACCESSORIES

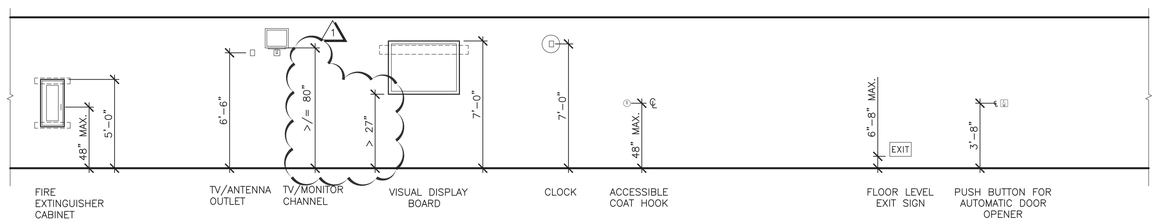

MISCELLANEOUS SPACES

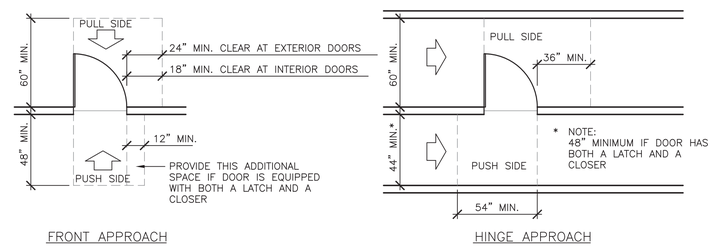

FRONT APPROACH

HINGE APPROACH

THESE DIAGRAMS ILLUSTRATE THE SPECIFIC REQUIREMENTS OF THE CBC REGULATIONS AND ARE INTENDED ONLY AS AN AID FOR BUILDING DESIGN AND CONSTRUCTION

NEW DOOR INSTALLATIONS

Cuschieri Horton Architects
1475 S. Bascom Ave. Suite 204
Campbell, California 95008
408.371.8200 Fx 408.371.8201

LICENSED ARCHITECT — C–34957 — JAN 31 2021 — RENEWAL DATE — STATE OF CALIFORNIA

SYMBOLS, NOTES, STANDARD MOUNTING HEIGHTS

TI ~~AND STORAGE BUILDING~~

TOWN OF LOS GATOS
ENGINEERING BUILDING TI
41 MILES AVENUE,
LOS GATOS, CA 95030

REVISIONS

NO.	ITEM	DATE
1	RESPONSE TO FIRST REVIEW COMMENTS	07/17/20

PERMIT #:

SUBMITTAL:
CITY SUBMITTAL SET
DRAWN BY: DN
CHECKED BY: RB
JOB NO: 1826
DATE: 12/04/19

SHEET NO.
A0.00

8/11/2020 8:35 AM

ABBREVIATIONS

NOTE: NOT ALL ABBREVIATIONS MAY BE USED

℄	CENTERLINE
ø	DIAMETER OR ROUND
∠	ANGLE
ACOUS.	ACOUSTICAL
ADJ.	ADJUSTABLE
AGG.	AGGREGATE
AL.	ALUMINUM
APPROX.	APPROXIMATE
ARCH.	ARCHITECTURAL
A.P.L.	ASSUMED PROPERTY LINE
A.F.F.	ABOVE FINISH FLOOR
ADD'L	ADDITIONAL
BD.	BOARD
BED.	BEDROOM
BITUM.	BITUMINOUS
BLDG.	BUILDING
BLKG.	BLOCKING
BM.	BEAM
BOT.	BOTTOM
CAB.	CABINET
C.B.	CATCH BASIN
C.T.	CERAMIC TILE
C.C.T.	CUBICLE CURTAIN TRACK
C.I.	CAST IRON
CIV.	CIVIL.
CLG.	CEILING
CLNG.	CEILING
CLR.	CLEAR
COL.	COLUMN
CONC.	CONCRETE
CONST.	CONSTRUCTION
CONT.	CONTINUOUS
CORR.	CORRIDOR
CTSK.	COUNTERSUNK
C.M.A.	CONCRETE MASONRY UNIT
C.D.U.	COMBINATION DISPENSING UNIT
DBL.	DOUBLE
DEPT.	DEPARTMENT
D.F.	DRINKING FOUNTAIN
DET.	DETAIL
DIA.	DIAMETER
DIM.	DIMENSION
DISP.	DISPENSER
DN.	DOWN
DR.	DOOR
DS.	DOWNSPOUT
DWG.	DRAWING
D.D.	DECK DRAIN
D.F.	DOUGLAS FIR
DEMO	DEMOLISH, DEMOLITION
(E)	EXISTING
EA.	EACH
E.J.	EXPANSION JOINT
EL.	ELEVATION
ELEC.	ELECTRICAL
ELECT.	ELECTRICAL
ELEV.	ELEVATION
EMERG.	EMERGENCY
ENCL.	ENCLOSURE
E.O.S.	EDGE OF SLAB
EQ.	EQUAL
EQPT.	EQUIPMENT
EQUIP.	EQUIPMENT
E.W.C.	ELECTRIC WATER COOLER
EXP.	EXPANSION
EXT.	EXTERIOR
F.A.	FIRE ALARM
F.C.O.	FLOOR CLEAN OUT
F.D.	FLOOR DRAIN
FDN.	FOUNDATION
F.A.	FIRE EXTINGUISHER
F.A.C.	FIRE EXTINGUISHER CABINET
F.H.C.	FIRE HOSE CABINET
FIN.	FINISH
FL.	FLOOR
FLUOR.	FLUORESCENT
F.O.C.	FACE OF CONCRETE
F.O.F.	FACE OF FINISH
F.O.S.	FACE OF STUDS
F.S.S.	FOLDING SHOWER SEAT
FT.	FOOT OR FEET
FTG.	FOOTING
FURR.	FURRING
F.H.S.	FLAT HEAD SCREW
F.R.	FIRE RETARDANT
GA.	GAGE
GALV.	GALVANIZED
GL.	GLASS
GND.	GROUND
GYP.	GYPSUM
GYP.BD.	GYPSUM WALL BOARD
GEN.	GENERAL
H.B.	HOSE BIBB
H.C.	HOLLOW CORE OR HANDICAP
HCA	HANDICAP ACCESSIBLE
H.M.	HOLLOW METAL
HORIZ.	HORIZONTAL
HR.	HOUR
I.D.	INSIDE DIAMETER
INSUL.	INSULATION
INT.	INTERIOR
IVT.	INTRAVENOUS TRACK
JAN.	JANITOR
J.T.	JOINT
KIT.	KITCHEN
LAB.	LABORATORY
LAM.	LAMINATE
LAV.	LAVATORY
LDSC.	LANDSCAPE
LT.	LIGHT
MAT.	MATERIAL
MAX.	MAXIMUM
M.C.	MEDICINE CABINET
MECH.	MECHANICAL
MEMB.	MEMBRANE
MET.	METAL
MFR.	MANUFACTURER
MIN.	MINIMUM
MIRR.	MIRROR
MISC.	MISCELLANEOUS
M.O.	MASONRY OPENING
MTD.	MOUNTED
MTL.	METAL
MUL.	MULLION
M.G.	MEDICAL GAS PANEL
M.B.	MACHINE BOLT
MK.BD.	MARKER BOARD
MBH	MOP AND BROOM HOLDER
(N)	NEW
N.I.C.	NOT IN CONTRACT
NO. or #	NUMBER
NOM.	NOMINAL
N.T.S.	NOT TO SCALE
O/	OVER
O.A.	OVERALL
O.C.	ON CENTER
O.D.	OUTSIDE DIAMETER
OPP.	OPPOSITE
O.F.D.	OVERFLOW DRAIN
OFF.	OFFICE
PAT.	PATIENT
PEN.	PENETRATION(S)
PL.	PLATE
P-LAM	PLASTIC LAMINATE
P.LAM	PLASTIC LAMINATE
PLY.	PLYWOOD
PLYWD.	PLYWOOD
PR.	PAIR
PTD	PAPER TOWEL DISPENSER
PUB.	PUBLIC
P.A.D.	POWER ACTUATED DEVICE
P.I.P.	POURED IN PLACE
P.T.	PRESSURE TREATED
PLMB.	PLUMBING
PLUMB.	PLUMBING
Q.T.	QUARRY TILE
R.	RISER
RAD.	RADIUS
R.D.	ROOF DRAIN
REF.	REFERENCE
REFR.	REFRIGERATOR
REINF.	REINFORCED
REQD.	REQUIRED
RESIL.	RESILIENT
R.H.	ROBE HOOK
RM.	ROOM
R.O.	ROUGH OPENING
RT.	RESILIENT TILE
RWD.	REDWOOD
R.W.L.	RAIN WATER LEADER
S.C.	SOLID CORE
SCD	SEAT COVER DISPENSER
S.C.D.	SEE CIVIL DRAWINGS
SCHED.	SCHEDULE
SD	SOAP DISPENSER
SECT.	SECTION
S.E.D.	SEE ELECTRICAL DRAWINGS
SH.	SHELF
SHWR.	SHOWER
SHT.	SHEET
SHT'G.	SHEATHING
SIM.	SIMILAR
S.L.D.	SEE LANDSCAPE DRAWINGS
S.F.	SQUARE FEET
S.F.A.D.	SEE FIRE ALARM DRAWINGS
S.F.S.D.	SEE FIRE SPRINKLER DRAWINGS
S.M.D.	SEE MECHANICAL DRAWINGS
S.M.S.	SHEET METAL SCREW
S.P.D.	SEE PLUMBING DRAWINGS
SQ.	SQUARE
S.S.	STAINLESS STEEL
S.S.D.	SEE STRUCTURAL DRAWINGS
STD.	STANDARD
STL.	STEEL
STOR.	STORAGE
STRL.	STRUCTURAL
STRUCT.	STRUCTURAL
SUSP.	SUSPENDED
S.V.	SHEET VINYL
T.D.	TRENCH DRAIN
TRD.	TREAD
T.B.	TOWEL BAR
T&B	TOP AND BOTTOM
T.O.C.	TOP OF CURB/CONCRETE
TEL.	TELEPHONE
TER.	TERRAZZO
T&G	TONGUE AND GROOVE
THK.	THICK/THICKNESS
TK.BD.	TACK BOARD
TLG	TOWN OF LOS GATOS
TLT.	TOILET
T.P.	TOP OF PAVEMENT/TELEPHONE PANELBOARD
T.P.A.	TOILET PAPER DISPENSER
T.V.	TELEVISION
TYP.	TYPICAL
T.O.S.	TOP OF STEEL
T.O.W.	TOP OF WALL
U.N.O.	UNLESS NOTED OTHERWISE
U.O.N.	UNLESS OTHERWISE NOTED
VCT	VINYL COMPOSITION TILE
VDB	VISUAL DISPLAY BOARD
VERT.	VERTICAL
VEST.	VESTIBULE
V.I.F.	VERIFY IN FIELD
W/	WITH
W.C.	WATER CLOSET
WD.	WOOD
W/O	WITHOUT
WP.	WATERPROOF
WR	WASTE RECEPTACLE
W.S.	WOOD SCREW
WT.	WEIGHT

PARTITION SCHEDULE

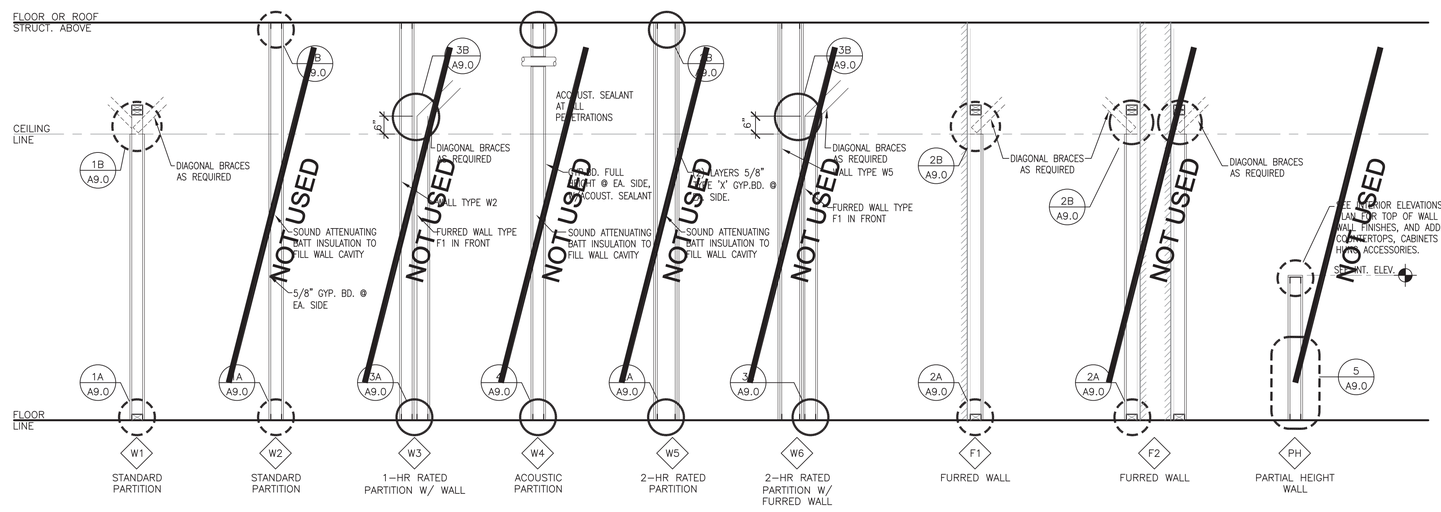

NOTES:

1. SEE T1.2 FOR ADD'L NOTES AND INFO AT WALL FRAMING
2. SEE FOOTNOTES AND DESCRIPTIONS FOR ADD'L INFO. ON EA. PARTITION TYPE INDICATED IN THIS SCHEDULE
3. PROVIDE SOUND ATTENUATING BATT INSULATION TO FILL WALL CAVITY AT ALL WALL TYPES NOTED TO HAVE INSULATION WITHIN THE SCHEDULE AND AT ALL PARTITION TYPE MARKS ON FLOOR PLANS WITH AN 'S' SUFFIX.
4. SEE REFERENCED DETAILS FOR U.L. OR OTHER ASSEMBLY TYPE INFO.
5. SEE DETAIL 11/A9.2 FOR TYPICAL WALL BACKING.
6. SEE SHEET A9.0 TYPICAL BRACING FOR WOOD STUDS.
7. FURRED WALLS SHALL BE 2x4 WOOD STUDS U.O.N.
8. STANDARD WALL PARTITION SHALL BE 2x4 WOOD STUDS EXCEPT FOR PLUMBING WALLS. ALL PLUMBING WALLS SHALL BE 2x6 WOOD STUDS.

Cuschieri Horton Architects

1475 S. Bascom Ave. Suite 204
Campbell, California 95008
408.371.8200 Fx 408.371.8201

LICENSED ARCHITECT
C-34957
JAN 31 2021
RENEWAL DATE
STATE OF CALIFORNIA

ABBREVIATIONS AND PARTITION SCHEDULE

TOWN OF LOS GATOS
ENGINEERING BUILDING TI ~~AND STORAGE BUILDING~~
41 MILES AVENUE,
LOS GATOS, CA 95030

REVISIONS

NO.	ITEM	DATE

PERMIT #:

SUBMITTAL:
CITY SUBMITTAL SET

DRAWN BY: DN
CHECKED BY: RB
JOB NO: 1826
DATE: 12/04/19

SHEET NO.
A0.01

8/11/2020 8:36 AM

TLG ENGINNEERING BUILDING TI

41 MILES AVENUE
LOS GATOS, CA

LEGEND

	EXISTING	PROPOSED
SAWCUT AND CONFORM LINE		
RETAINING WALL		
A.C. PAVEMENT		
CONC. VALLEY GUTTER		
CONC. SIDEWALK OR PAD		
6" CURB & GUTTER		
EDGE OF A.C. PAVEMENT	EP	
6" VERTICAL CURB		
CENTER LINE		
SANITARY SEWER MAIN	8" SS	8" SS
STORM DRAIN MAIN	12" SD	15" SD
PERFORATED PIPE		6" SD
WATER MAIN	6" W	6" W
FIRE WATER MAIN	6" FW	4" FW
DOMESTIC WATER MAIN	6" DW	4" DW
CHILLED WATER MAIN	6" CHW	4" CHW
IRRIGATION LINE	2" IRR	4" IRR
HOT WATER SUPPLY & RETURN	HWS–HWR	HWS HWR
STEAM LINE	ST	ST
TRENCH DRAIN		
CONDENSATE RETURN	CR	CR
METAL BEAM GUARD RAIL		
SILT FENCE		
FLOW LINE		
CHAIN LINK FENCE	x x	x x
GAS MAIN	G	2" G
ELECTRIC AND SIGNAL DUCT BANK	E	E
OVERHEAD ELECTRIC LINE	OHE	OHE
UNDERGROUND ELECTRIC LINE	UGE	UGE
STREET LIGHT CONDUIT	SL	SL
CONTOUR ELEVATION LINE	85	90 89
SPOT ELEVATION	x 95.94	FG 95.94
DIRECTION OF SLOPE		2:1 1%
GAS METER		GM
GAS VALVE	GV	GV
WATER METER		WM
WATER VALVE	WV	WV
FIRE HYDRANT		
BACK FLOW PREVENTOR		
POST INDICATOR VALVE	PIV	PIV
FIRE DEPARTMENT CONNECTION		
WATER LINE TEE		
CAP AND PLUG END		
AIR RELEASE VALVE		ARV
SIGN		
ACCESSIBLE RAMP		
CONCRETE THRUST BLOCK		
REDUCER		
SANITARY SEWER MANHOLE		
SANITARY SEWER CLEANOUT	SSCO	SSCO
STORM DRAIN MANHOLE		
STORMCEPTOR		
STORM DRAIN AREA DRAIN		
STORM DRAIN CATCH BASIN	CB	
STORM DRAIN CURB INLET		
STORM DRAIN CLEANOUT	SDCO	SDCO
ELECTROLIER		
JOINT POLE	JP	
OVERLAND RELEASE		
CONSTRUCTION DETAIL REFERENCE		15 / C5.2 DETAIL REFERENCE SHEET REFERENCE

ABBREVIATIONS

AB	–	AGGREGATE BASE
AC	–	ASPHALT CONCRETE
AD	–	AREA DRAIN
ADA	–	AMERICANS WITH DISABILITIES ACT
ASB	–	AGGREGATE SUBBASE
BC	–	BEGINNING OF CURVE
BFP	–	BACK FLOW PREVENTOR
BLDC	–	BUILDING CORNER
BLDG	–	BUILDING
BOD	–	BOTTOM OF DOCK
BOL	–	BOLLARD
BOS	–	BOTTOM OF STEP
BOW	–	FG @ BOTTOM OF WALL
BVC	–	BEGIN VERTICAL CURVE
BW	–	BACK OF WALK
C	–	CONCRETE OR CIVIL
C&G	–	CURB AND GUTTER
CB	–	CATCH BASIN
CI	–	CURB INLET
CIP	–	CAST IRON PIPE
CL	–	CENTER LINE OR CLASS
CMP	–	CORRUGATED METAL PIPE
CO	–	CLEANOUT
CONC	–	CONCRETE
CONST	–	CONSTRUCTION OR CONSTRUCT
CY	–	CUBIC YARD
DCDA	–	DOUBLE CHECK DETECTOR ASSEMBLY
DI	–	DROP INLET
DIP	–	DUCTILE IRON PIPE
DOM	–	DOMESTIC
DW	–	DOMESTIC WATER
DWG	–	DRAWING
E	–	EAST
EC	–	END OF CURVE
EP	–	EDGE OF PAVEMENT
ER	–	END OF RETURN
EVC	–	END VERTICAL CURVE
ELEV	–	ELEVATION
EX., EXIST.	–	EXISTING
FC	–	FACE OF CURB
FDC	–	FIRE DEPARTMENT CONNECTION
FF	–	FINISHED FLOOR
FG	–	FINISHED GRADE
FH	–	FIRE HYDRANT
FL	–	FLOW LINE
FOUND	–	FOUNDATION
FS	–	FINISHED SURFACE
FT	–	FOOT
FW	–	FIRE WATER
G	–	GROUND ELEVATION
GB	–	GRADE BREAK
GV	–	GATE VALVE
HCR	–	ACCESSIBLE RAMP
HP	–	HIGH POINT
INV	–	INVERT ELEVATION
JP	–	JOINT POLE
JT	–	JOINT TRENCH
LIP	–	LIP OF GUTTER
LP	–	LOW POINT
LSA	–	LANDSCAPE ARCHITECT
MAX	–	MAXIMUM
MEP	–	MECHANICAL/ELECTRICAL/PLUMBING
MH	–	MANHOLE
MIN	–	MINIMUM
MPVC	–	MIDPOINT OF VERTICAL CURVE
MON	–	MONUMENT
N	–	NORTH
N.I.C.	–	NOT IN CONTRACT
NO	–	NUMBER
NTS	–	NOT TO SCALE
P	–	PAVEMENT ELEVATION
PCC	–	PORTLAND CEMENT CONCRETE / POINT OF CONTINUOUS CURVATURE
PIV	–	POST INDICATOR VALVE
PL	–	PROPERTY LINE
PMH	–	POWER MANHOLE
POC	–	POINT ON CURVE
PP	–	POWER POLE
PRC	–	POINT OF REVERSE CURVATURE
PVC	–	POLYVINYL CHLORIDE PIPE
R	–	RADIUS
RC	–	RELATIVE COMPACTION
RCP	–	REINFORCED CONCRETE PIPE
RPPA	–	REDUCED PRESSURE PRINCIPLE ASSEMBLY
R/W	–	RIGHT OF WAY
S	–	SLOPE OR SOUTH
S.A.D.	–	SEE ARCHITECTURAL DRAWINGS
SB	–	SEDIMENT BASIN
SD	–	STORM DRAIN
S.E.D.	–	SEE ELECTRICAL DRAWINGS
SF	–	SILT FENCE
SG	–	SUBGRADE
S.L.D.	–	SEE LANDSCAPE DRAWINGS
S.M.D.	–	SEE MECHANICAL DRAWINGS
SMH	–	SIGNAL MANHOLE
S.P.D.	–	SEE PLUMBING DRAWINGS
SS	–	SANITARY SEWER
STA	–	STATION
STD	–	STANDARD
S/W	–	SIDEWALK
TC	–	TOP OF CURB
TD	–	TRENCH DRAIN
TOD	–	TOP OF DOCK
TOE	–	TOE OF SLOPE
TOS	–	TOP OF STAIR
TOW	–	FG @ TOP OF WALL
TS	–	TOP OF SLAB
TYP	–	TYPICAL
UON	–	UNLESS OTHERWISE NOTED
U/G	–	UNDERGROUND
VC	–	VERTICAL CURVE
WM	–	WATER METER
WV	–	WATER VALVE
W	–	WEST
WWF	–	WELDED WIRE FABRIC
W/	–	WITH

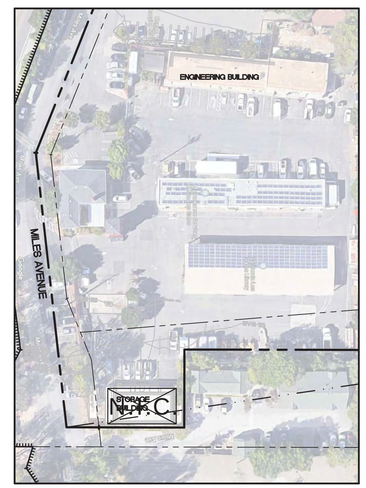

KEY MAP
NTS

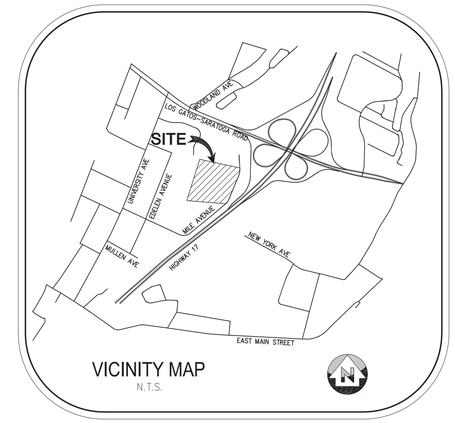

VICINITY MAP
N.T.S.

PROJECT DESCRIPTION

EXISTING ENGINEERING BUILDING ADA CODE COMPLIANCE UPGRADES TO THE MAIN ENTRANCE AND ASSOCIATED PARKING LOT WORK.

~~NEW PRE FAB BUILDING FOR TOWN USE. GRADING/DRAINAGE, STORM UTILITIES, AND ADA PARKING/ACCESS.~~

CIVIL SHEET INDEX

C–1.0	COVER SHEET
C–1.1	CONSTRUCTION NOTES
C–1.2	TOPOGRAPHIC SURVEY
C–2.0	DEMOLITION PLAN
C–3.0	GRADING & DRAINAGE PLAN
~~C–4.0~~	~~UTILITY PLAN~~
C–5.0	EROSION CONTROL PLAN
C–5.1	EROSION CONTROL PLAN DETAILS
C–5.2	BMP
C–6.0	CONSTRUCTION DETAILS

811 Know what's below. Call before you dig.

UNAUTHORIZED CHANGES AND USES

CAUTION : *THE ENGINEER PREPARING THESE PLANS WILL NOT BE RESPONSIBLE FOR, OR LIABLE FOR, UNAUTHORIZED CHANGES TO OR USES OF THESE PLANS. ALL CHANGES TO THE PLANS MUST BE IN WRITING AND MUST BE APPROVED BY THE PREPARER OF THE PLANS.*

Cuschieri Horton Architects
1475 S. Bascom Ave, Suite 204
Campbell, California 95008
408.371.8200 Fx 408.371.8201

SANDIS
CIVIL ENGINEERS
SURVEYORS
PLANNERS
1700 S. Winchester Blvd,
Suite 200, Campbell, CA 95008
P. 408.636.0900
F. 408.636.0999
www.sandis.net
SILICON VALLEY TRI-VALLEY CENTRAL VALLEY
SACRAMENTO EAST BAY/ SF

DATE JULY 17, 2020

REGISTERED PROFESSIONAL ENGINEER CHAD J. BROWNING No. C68315 Exp. 9/30/21 CIVIL STATE OF CALIFORNIA

CHAD J. BROWNING
R.C.E. NO. 68315,
EXPIRES 9–30–21

COVER SHEET

TOWN OF LOS GATOS
ENGINEERING BUILDING TI ~~AND STORAGE BUILDING~~
41 MILES AVENUE,
LOS GATOS, CA 95030

REVISIONS

NO.	ITEM	DATE

PERMIT #:

SUBMITTAL:
100% SUBMITTAL SET
DRAWN BY: AL
CHECKED BY: SY
JOB NO: 218290
DATE: 07/17/20

SHEET NO.
C-1.0

File: S:\218290\(4) ENGINEERING\(2) PLAN SETS\(3) SHEET SET\ONSITE\C-1.0-COVER.dwg Date:Jul 21, 2020 - 4:27pm, spatel

CONSTRUCTION NOTES

1. ALL OFF-SITE CONSTRUCTION MATERIAL AND METHODS SHALL COMPLY WITH THE LATEST EDITION OF THE TOWN OF LOST GATOS AND THE LATEST CALTRANS STANDARD PLANS & SPECIFICATIONS.
2. CONTRACTOR SHALL LEAVE AN EMERGENCY PHONE NUMBER WITH THE TOWN OF LOST GATOS POLICE AND FIRE DEPARTMENTS.
3. CONTRACTOR SHALL POST ON THE SITE, EMERGENCY TELEPHONE NUMBERS FOR PUBLIC WORKS, AMBULANCE, POLICE, AND FIRE DEPARTMENTS.
4. CONTRACTOR SHALL NOTIFY ALL PUBLIC OR PRIVATE UTILITY OWNERS 48 HOURS PRIOR TO COMMENCEMENT OF WORK ADJACENT TO THE UTILITY UNLESS AN EXCAVATION PERMIT SPECIFIES OTHERWISE.
5. THE CONTRACTOR SHALL HIRE A STREET CLEANING CONTRACTOR TO CLEAN UP DIRT AND DEBRIS FROM CITY STREETS THAT ARE ATTRIBUTABLE TO THE DEVELOPMENT'S CONSTRUCTION ACTIVITIES.
6. ALL GRADING SHALL BE PERFORMED IN SUCH A MANNER AS TO COMPLY WITH THE STANDARDS ESTABLISHED BY THE AIR QUALITY MAINTENANCE DISTRICT FOR AIRBORNE PARTICULATES (DUST).
7. ALL GRADING SHALL CONFORM TO APPROVED SPECIFICATIONS PRESENTED HEREON OR ATTACHED HERETO. ALL GRADING WORK SHALL BE OBSERVED AND APPROVED BY THE SOILS ENGINEER. THE GEOTECHNICAL ENGINEER SHALL BE NOTIFIED AT LEAST 48 HOURS BEFORE BEGINNING ANY GRADING. UNOBSERVED AND UNAPPROVED GRADING WORK SHALL BE REMOVED AND REDONE AT THE CONTRACTORS EXPENSE.
8. ALL MATERIALS, REQUIRED FOR THE COMPLETE EXECUTION OF THE PROJECT, SHALL BE FURNISHED AND INSTALLED BY THE CONTRACTOR UNLESS OTHERWISE NOTED.
9. THE CONTRACTOR SHALL PROVIDE ALL LIGHTS, SIGNS, BARRICADES, FLAGMEN OR OTHER DEVICES NECESSARY TO PROVIDE FOR PUBLIC SAFETY DURING THE CONSTRUCTION PERIOD.
10. THE CONTRACTOR SHALL BE RESPONSIBLE TO REPAIR OR REPLACE ANY EXISTING IMPROVEMENTS OF UNDERGROUND FACILITIES DAMAGED DURING THE CONSTRUCTION PERIOD.
11. THE CONTRACTOR SHALL BE RESPONSIBLE FOR OBTAINING ALL ENCROACHMENT, EXCAVATION, CONCRETE, ELECTRICAL, PLUMBING, ETC. PERMITS NECESSARY PRIOR TO BEGINNING CONSTRUCTION FOR ANY WORK.
12. THE CONTRACTOR SHALL HAVE A SUPERINTENDENT OR REPRESENTATIVE ON SITE AT ALL TIMES DURING CONSTRUCTION.
13. STORAGE OF CONSTRUCTION MATERIAL AND EQUIPMENT ON CITY STREETS WILL NOT BE PERMITTED.
14. CONSTRUCTION EQUIPMENT SHALL BE PROPERLY MUFFLED. UNNECESSARY IDLING OF GRADING CONSTRUCTION EQUIPMENT IS PROHIBITED.
15. CONSTRUCTION EQUIPMENT, TOOLS, ETC. SHALL NOT BE CLEANED OR RINSED INTO A STREET, GUTTER OR STORM DRAIN.
16. A CONTAINED AND COVERED AREA ON-SITE SHALL BE USED FOR STORAGE OF CEMENT BAGS, PAINTS, FLAMMABLE, OILS, FERTILIZERS, PESTICIDES, OR ANY OTHER MATERIALS THAT HAVE POTENTIAL FOR BEING DISCHARGED TO THE STORM DRAIN SYSTEM BY WIND OR IN THE EVENT OF A MATERIAL SPILL.
17. ALL CONSTRUCTION DEBRIS SHALL BE GATHERED ON A REGULAR BASIS AND PLACED IN A DUMPSTER WHICH IS EMPTIED OR REMOVED WEEKLY. WHEN FEASIBLE, TARPS SHALL BE USED ON THE GROUND TO COLLECT FALLEN DEBRIS OR SPLATTERS THAT COULD CONTRIBUTE TO STORMWATER POLLUTION.
18. ANY TEMPORARY ON-SITE CONSTRUCTION PILES SHALL BE SECURELY COVERED WITH A TARP OR OTHER DEVICE TO CONTAIN DEBRIS.
19. CONCRETE TRUCKS AND CONCRETE FINISHING OPERATIONS SHALL NOT DISCHARGE WASH WATER INTO THE STREET GUTTERS OR DRAINS.

DISCREPANCIES

IF THERE ARE ANY DISCREPANCIES BETWEEN DIMENSIONS IN DRAWINGS AND EXISTING CONDITIONS WHICH WILL AFFECT THE WORK, THE CONTRACTOR SHALL BRING SUCH DISCREPANCIES TO THE ATTENTION OF THE ENGINEER FOR ADJUSTMENT BEFORE PROCEEDING WITH THE WORK. THE CONTRACTOR SHALL BE RESPONSIBLE FOR THE PROPER FITTING OF ALL WORK AND FOR THE COORDINATION OF ALL TRADES, SUBCONTRACTORS, AND PERSONS ENGAGED UPON THIS CONTRACT.

UTILITY/POTHOLE NOTE

THE TYPES, LOCATIONS, SIZES AND /OR DEPTHS OF EXISTING UNDERGROUND UTILITIES AS SHOWN ARE APPROXIMATE AND WERE OBTAINED FROM SOURCES OF VARYING RELIABILITY. ONLY ACTUAL EXCAVATION WILL REVEAL THE TYPES, EXTENT, SIZES, LOCATIONS AND DEPTHS OF SUCH UNDERGROUND UTILITIES. A REASONABLE EFFORT HAS BEEN MADE TO LOCATE AND DELINEATE ALL KNOWN UNDERGROUND UTILITIES. HOWEVER, THE ENGINEER CAN ASSUME NO RESPONSIBILITY FOR THE COMPLETENESS OR ACCURACY OF ITS DELINEATION OF SUCH UNDERGROUND UTILITIES WHICH MAY BE ENCOUNTERED, BUT WHICH ARE NOT SHOWN ON THESE PLANS. THE CONTRACTOR SHALL BE RESPONSIBLE FOR LOCATING ALL UNDERGROUND FACILITIES AND UTILITIES BY POTHOLING PRIOR TO COMMENCING CONSTRUCTION.

DIMENSIONS

ALL DIMENSIONS ON THE PLANS ARE IN FEET OR DECIMALS THEREOF UNLESS SPECIFICALLY CALLED OUT AS FEET AND INCHES.

ENCROACHMENT NOTE:

A SEPARATE ENCROACHMENT PERMIT IS REQUIRED FOR ALL WORK WITHIN THE PUBLIC RIGHT-OF-WAY. IT IS THE CONTRACTORS RESPONSIBILITY TO OBTAIN THIS ENCROACHMENT PERMIT AND FOLLOW ALL CONSTRUCTION RELATED REQUIREMENTS OF SUCH PERMIT.

FLOODZONE

THIS PROJECT IS IN FLOOD ZONE X: 0.2% ANNUAL CHANCE FLOOD HAZARD, AREAS OF 1% ANNUAL CHANCE FLOOD WITH AVERAGE DEPTH LESS THAN ONE FOOT OR WITH DRAINAGE AREAS OF LESS THAN ONE SQUARE MILE.
INFORMATION OBTAINED FROM THE FLOOD INSURANCE RATE MAP (FIRM) NO. 06085C0376H DATED MAY 18, 2009 PRODUCED BY THE FEDERAL EMERGENCY MANAGEMENT AGENCY (FEMA).

FIRE DESIGN NOTE:

THE CONTRACTOR SHALL DESIGN, PREPARE SHOP DRAWINGS FOR, OBTAIN ALL REQUIRED APPROVALS, AND CONSTRUCT THE FIRE SYSTEM FOR THE PROPOSED PROJECT. CONTRACTOR SHALL HAVE SHOP DRAWINGS STAMPED BY A FIRE PROTECTION ENGINEER AS REQUIRED BY THE LOCAL AUTHORITY.

HAZARDOUS MATERIALS NOTE

THERE MAY BE ASBESTOS CONTAINING PIPE AND PIPE INSTALLATION OR OTHER HAZARDOUS MATERIALS WITHIN THE PROJECT AREA. THE CONTRACTOR WILL PROTECT ALL HAZARDOUS CONTAINING ITEMS DURING THE EXECUTION OF THIS CONTRACT. ADDITIONALLY THE CONTRACTOR WILL COMPLY WITH ALL LOCAL, STATE AND FEDERAL REGULATIONS REGARDING CONSTRUCTION ACTIVITIES NEAR HAZARDOUS MATERIALS.

CONSTRUCTION FENCE

1. CONTRACTOR SHALL PROVIDE A CONSTRUCTION FENCE AROUND THE ENTIRE AREA OF DEMOLITION AND CONSTRUCTION, INCLUDING ALL STAGING, STORAGE, CONSTRUCTION OFFICE AND LAYDOWN AREAS.
2. CONSTRUCTION FENCE SHALL BE A MINIMUM OF A 6' HIGH GALVANIZED CHAIN LINK WITH GREEN WINDSCREEN FABRIC ON THE OUTSIDE OF THE FENCE.
3. CONSTRUCTION FENCE ADDRESSED IN THESE NOTES IS ONLY FOR VISUAL CONFORMANCE OF THIS CONSTRUCTION SITE TO THE TOWN OF LOST GATOS STANDARDS. CONTRACTOR MAY BE REQUIRED TO PROVIDE ADDITIONAL FENCING, BARRICADES OR OTHER SAFETY DEVICES TO KEEP THE SITE SECURE AND SAFE.

UNDERGROUND WORK CAUTION

CONTRACTOR SHALL CONTACT UNDERGROUND SERVICE ALERT FOR LOCATION OF UNDERGROUND UTILITIES AT LEAST 48 HOURS PRIOR TO COMMENCEMENT OF CONSTRUCTION. FOR NORTHERN CALIFORNIA DIAL 811 OR (800) 227-2600. FOR OTHER AREAS CALL (800) 642-2444. CONTRACTOR SHALL VERIFY ALL EXISTING UTILITIES PRIOR TO BEGINNING ANY WORK ON THIS SITE.

DEMOLITION NOTES

1. CONTRACTOR IS TO COMPLY WITH ALL GENERAL AND STATE REQUIREMENTS INVOLVING THE REMOVAL AND DISPOSAL OF HAZARDOUS MATERIAL(S).
2. CONTRACTOR'S BID IS TO INCLUDE ALL VISIBLE SURFACE AND ALL SUBSURFACE FEATURES IDENTIFIED TO BE REMOVED OR ABANDONED IN THESE DOCUMENTS.
3. THE CONTRACTOR SHALL BE RESPONSIBLE FOR A SITE INSPECTION TO FULLY ACKNOWLEDGE THE EXTENT OF THE DEMOLITION WORK.
4. THE CONTRACTOR SHALL BE RESPONSIBLE FOR OBTAINING ANY AND ALL PERMITS NECESSARY FOR ENCROACHMENT, GRADING, DEMOLITION, AND DISPOSAL OF SAID MATERIALS AS REQUIRED BY PRIVATE, LOCAL AND STATE JURISDICTIONS. THE CONTRACTOR SHALL PAY ALL FEES ASSOCIATED WITH THE DEMOLITION WORK.
5. BACKFILL ALL DEPRESSIONS AND TRENCHES FROM DEMOLITION TO THE SATISFACTION OF THE GEOTECHNICAL ENGINEER.
6. REMOVAL OF LANDSCAPING SHALL INCLUDE ROOTS AND ORGANIC MATERIALS TO THE SATISFACTION OF THE GEOTECHNICAL ENGINEER.
7. PRIOR TO BEGINNING DEMOLITION WORK ACTIVITIES, CONTRACTOR SHALL INSTALL EROSION CONTROL MEASURES OUTLINED IN THE EROSION CONTROL PLAN & DETAILS AND THE PROJECT SWPPP IF APPLICABLE.
8. THE CONTRACTOR SHALL MAINTAIN ALL SAFETY DEVICES, AND SHALL BE RESPONSIBLE FOR CONFORMANCE TO ALL LOCAL, STATE AND FEDERAL SAFETY AND HEALTH STANDARDS LAWS AND REGULATIONS.
9. THE CONTRACTOR SHALL PROTECT FROM DAMAGE ALL EXISTING IMPROVEMENTS FACILITIES AND STRUCTURES WHICH ARE TO REMAIN. ANY ITEMS DAMAGED BY THE CONTRACTOR OR THEIR AGENTS OR ANY ITEMS REMOVED FOR HIS USE SHALL BE REPLACED IN EQUAL OR BETTER CONDITION AS APPROVED BY THE ARCHITECT OR OWNER'S REPRESENTATIVE.
10. COORDINATE WITH ELECTRICAL, MECHANICAL, LANDSCAPING AND ARCHITECTURAL DRAWINGS FOR UTILITY SHUT-DOWN/DISCONNECT LOCATIONS. CONTRACTOR IS TO SHUT OFF ALL UTILITIES AS NECESSARY PRIOR TO DEMOLITION. CONTRACTOR IS TO COORDINATE SERVICE INTERRUPTIONS WITH THE UTILITY OWNER AND ANY AFFECTED PROPERTIES OR BUILDINGS. SEE ARCHITECTURAL PLANS FOR ADDITIONAL DEMOLITION SCOPE OF WORK.
11. THIS PLAN IS NOT INTENDED TO BE A COMPLETE CATALOGUE OF ALL EXISTING STRUCTURES AND UTILITIES. THIS PLAN INTENDS TO DISCLOSE GENERAL INFORMATION KNOWN BY THE ENGINEER AND TO SHOW THE LIMITS OF THE AREA WHERE WORK WILL BE PERFORMED. THIS PLAN SHOWS THE EXISTING FEATURES TAKEN FROM A FIELD SURVEY, FIELD INVESTIGATIONS AND AVAILABLE INFORMATION. THIS PLAN MAY OR MAY NOT ACCURATELY REFLECT THE TYPE OR EXTENT OF THE ITEMS TO BE ENCOUNTERED AS THEY ACTUALLY EXIST. WHERE EXISTING FEATURES ARE NOT SHOWN, IT IS NOT IMPLIED THAT THEY ARE NOT TO BE DEMOLISHED OR RELOCATED. THE CONTRACTOR SHALL PERFORM A THOROUGH FIELD INVESTIGATION AND REVIEW OF THE SITE WITHIN THE LIMIT OF WORK SHOWN IN THIS PLAN SET TO DETERMINE THE TYPE, QUANTITY AND EXTENT OF ANY AND ALL ITEMS. THE CONTRACTOR SHALL BE SOLELY RESPONSIBLE FOR DETERMINING THE EXTENT OF EXISTING STRUCTURES AND UTILITIES AND QUANTITY OF WORK INVOLVED IN REMOVING THESE ITEMS FROM THE SITE.
12. CONTRACTOR TO DEMOLISH AND REMOVE ALL IRRIGATION IN LANDSCAPE AREAS WITHIN THE LIMIT OF WORK. IF ANY IRRIGATION LINES OR MAINS ARE IN THE LIMIT OF WORK OR ARE DAMAGED THAT SERVE LANDSCAPE TO REMAIN, CONTRACTOR TO RECONNECT OR RELOCATE AT NO ADDITIONAL COST TO OWNER.
13. PROTECT ALL EXISTING UTILITIES IN PLACE UNLESS OTHERWISE NOTED. REPLACE ANY DAMAGED UTILITY TO REMAIN TO KEEP OPERABLE DURING CONSTRUCTION.
14. ALL UTILITY SHUT DOWNS ARE TO BE AVOIDED. IF SHUT DOWNS ARE NECESSARY, CONTRACTOR TO COORDINATE SHUT DOWN WITH UTILITY OWNER WITH 48 HOUR MINIMUM NOTICE.
15. ALL EXISTING STORM DRAIN, SANITARY SEWER, AND WATER MAINS THAT SERVE EXISTING BUILDINGS MUST REMAIN OPERABLE DURING CONSTRUCTION. CONTRACTOR TO SET UP TEMPORARY SERVICE OR PUMP AS NECESSARY TO ENSURE UNINTERRUPTED SERVICE.

RECORD DRAWING NOTE

THE CONTRACTOR SHALL KEEP UP-TO-DATE AND ACCURATE A COMPLETE RECORD SET OF PRINTS OF THE CONTRACT DRAWINGS SHOWING EVERY CHANGE FROM THE ORIGINAL DRAWINGS MADE DURING THE COURSE OF CONSTRUCTION INCLUDING EXACT FINAL LOCATION, ELEVATION, SIZES, MATERIALS, AND DESCRIPTION OF ALL WORK. RECORDS SHALL BE "REDLINED" ON A SET OF CONSTRUCTION PLAN DRAWINGS. A COMPLETE SET OF CORRECTED AND COMPLETED RECORD DRAWING PRINTS SHALL BE SUBMITTED TO THE CITY ENGINEER AND DEVELOPER'S CIVIL ENGINEER PRIOR TO FINAL ACCEPTANCE FOR REVIEW AND APPROVAL BY THE CITY ENGINEER.

DUST CONTROL NOTES

1. WATER TRUCKS SHALL BE PRESENT AND IN USE AT THE CONSTRUCTION SITE. ALL PORTIONS OF THE SITE SUBJECT TO BLOWING DUST SHALL BE WATERED AS OFTEN AS DEEMED NECESSARY BY THE CLIENT/INSPECTOR IN ORDER TO INSURE PROPER CONTROL OF BLOWING DUST FOR THE DURATION OF THE PROJECT.
2. ALL PUBLIC STREETS AND MEDIANS SOILED OR LITTERED DUE TO THIS CONSTRUCTION ACTIVITY SHALL BE CLEANED AND SWEPT ON A DAILY BASIS DURING THE WORK WEEK, OR AS OFTEN AS DEEMED NECESSARY BY THE CLIENT/INSPECTOR, OR TO THE SATISFACTION OF THE TOWN OF LOST GATOS' DEPARTMENT OF PUBLIC WORKS.
3. ALL TRUCKS HAULING SOIL, SAND, AND OTHER LOOSE MATERIALS SHALL BE COVERED WITH TARPAULINS OR OTHER EFFECTIVE COVERS.
4. WHEEL WASHERS SHALL BE INSTALLED AND USED TO CLEAN ALL TRUCKS AND EQUIPMENT LEAVING THE CONSTRUCTION SITE. IF WHEEL WASHERS CANNOT BE INSTALLED, TIRES OR TRACKS OF ALL TRUCKS AND EQUIPMENT SHALL BE WASHED OFF BEFORE LEAVING THE CONSTRUCTION SITE.
5. THE CONTRACTOR SHALL DEMONSTRATE DUST SUPPRESSION MEASURES, SUCH AS REGULAR WATERING, WHICH SHALL BE IMPLEMENTED TO REDUCE EMISSIONS DURING CONSTRUCTION AND GRADING IN A MANNER MEETING THE APPROVAL OF THE CONSTRUCTION MANAGER. THIS SHALL ASSIST IN REDUCING SHORT-TERM IMPACTS FROM PARTICLES WHICH COULD RESULT IN NUISANCES THAT ARE PROHIBITED BY RULE 403 (FUGITIVE DUST).
6. GRADING OR ANY OTHER OPERATIONS THAT CREATES DUST SHALL BE STOPPED IMMEDIATELY IF DUST AFFECTS ADJACENT PROPERTIES. THE CONTRACTOR SHALL PROVIDE SUFFICIENT DUST CONTROL FOR THE ENTIRE PROJECT SITE IN ACCORDANCE WITH THE PROJECT SWPPP (IF ONE EXISTS) OR AS APPLICABLE PER LOCAL REGULATIONS AT ALL TIMES. THE SITE SHALL BE SPRINKLERED AS NECESSARY TO PREVENT DUST NUISANCE. IN THE EVENT THAT THE CONTRACTOR NEGLECTS TO USE ADEQUATE MEASURES TO CONTROL DUST, THE CLIENT RESERVES THE RIGHT TO TAKE WHATEVER MEASURES ARE NECESSARY TO CONTROL DUST AND CHARGE THE COST TO THE CONTRACTOR.
7. THE CONTRACTOR IS RESPONSIBLE FOR DUST CONTROL MEASURES AND FOR OBTAINING ALL REQUIRED PERMITS AND APPROVALS. ALL GRADING OPERATIONS SHALL BE SUSPENDED DURING SECOND (OR WORSE) STAGE SMOG ALERTS.

PAVEMENT SECTIONS

1. SEE STRUCTURAL DRAWINGS FOR BUILDING SLAB SECTIONS AND PAD PREPARATIONS.
2. SEE GEOTECHNICAL REPORT FOR ALL FLATWORK AND VEHICULAR PAVEMENT SECTIONS AND BASE REQUIREMENTS.
3. THE FINAL OR SURFACE LAYER OF ASPHALT CONCRETE SHALL NOT BE PLACED UNTIL ALL ON-SITE IMPROVEMENTS HAVE BEEN COMPLETED, INCLUDING ALL GRADING, AND ALL UNACCEPTABLE CONCRETE WORK HAS BEEN REMOVED AND REPLACED, UNLESS OTHERWISE APPROVED BY THE CITY ENGINEER AND/OR DEVELOPER'S CIVIL ENGINEER.
4. ALL PAVING SHALL BE IN CONFORMANCE WITH SECTION 26 "AGGREGATE BASE" AND SECTION 39 "ASPHALT CONCRETE" PER LATEST EDITION OF CALTRANS STANDARD SPECIFICATIONS.

GENERAL UTILITY NOTES

1. ALL TRENCHES SHALL BE BACK FILLED PER THE GEOTECHNICAL REPORT OR UTILITY OWNERS STANDARD DETAILS AND SPECIFICATIONS.
2. CONTRACTOR SHALL STAKE LOCATION OF ABOVE GROUND UTILITY EQUIPMENT (TRANSFORMER, GAS METER, ETC.) . PLANNING DEPARTMENT MUST SPECIFICALLY AGREE WITH LOCATION PRIOR TO PROCEEDING WITH ANY REVISIONS TO APPROVED LOCATIONS.
3. CATHODIC PROTECTION SHALL BE REQUIRED ON ALL METALLIC FITTINGS AND ASSEMBLIES THAT ARE IN CONTACT WITH THE SOIL, UNLESS SPECIFICALLY DEEMED UNNECESSARY BY THE GEOTECHNICAL REPORT. CONTRACTOR IS RESPONSIBLE TO FULLY ENGINEER AND INSTALL THIS SYSTEM AND COORDINATE ANODE AND TEST STATION LOCATIONS WITH THE UTILITY OWNER.
4. COMPLETE SYSTEMS: ALL UTILITY SYSTEMS ARE DELINEATED IN A SCHEMATIC MANNER ON THESE PLANS. CONTRACTOR IS TO PROVIDE ALL FITTINGS, ACCESSORIES AND WORK NECESSARY TO COMPLETE THE UTILITY SYSTEM SO THAT IT IS FULLY FUNCTIONING FOR THE PURPOSE INTENDED.
5. UNDERGROUND UTILITIES OR STRUCTURES ARE SHOWN IN THEIR APPROXIMATE LOCATIONS AND EXTENT BASED UPON RECORD INFORMATION. LOCATIONS MAY NOT HAVE BEEN VERIFIED IN THE FIELD AND NO GUARANTEE IS MADE TO THE ACCURACY OR COMPLETENESS OF THE INFORMATION SHOWN. THE CLIENT, BY ACCEPTING THESE PLANS OR PROCEEDING WITH IMPROVEMENTS PURSUANT THERETO, AGREES TO ASSUME LIABILITY AND TO HOLD UNDERSIGNED HARMLESS FOR ANY DAMAGES RESULTING FROM THE EXISTENCE OF UNDERGROUND UTILITIES OR STRUCTURES NOT REPORTED TO THE UNDERSIGNED; NOT INDICATED ON THE PUBLIC RECORDS EXAMINED, LOCATED AT VARIANCE WITH THOSE REPORTED OR SHOWN ON RECORDS EXAMINED.
6. CONTRACTOR SHALL VERIFY ALL EXISTING INVERT ELEVATIONS FOR STORM DRAIN AND SANITARY SEWER CONSTRUCTION PRIOR TO COMMENCEMENT OF ANY WORK. ALL WORK FOR STORM AND SANITARY SEWER INSTALLATION SHALL BEGIN AT THE DOWNSTREAM CONNECTION POINT. THIS WILL ALLOW FOR ANY NECESSARY ADJUSTMENTS TO BE MADE PRIOR TO THE INSTALLATION OF THE ENTIRE LINE. IF THE CONTRACTOR FAILS TO BEGIN AT THE DOWNSTREAM CONNECTION POINT AND WORK UP-STREAM, AND SHALL PROCEED AT HIS OWN RISK AND BE RESPONSIBLE FOR ANY ADJUSTMENTS NECESSARY.
7. EXISTING UTILITY CROSSINGS OF NEW PIPELINE ARE SHOWN ACCORDING TO THE BEST AVAILABLE INFORMATION. GAS, WATER AND SEWER SERVICE LATERALS ARE SHOWN ACCORDING TO THE BEST AVAILABLE INFORMATION. THE CONTRACTOR SHALL VERIFY THE TYPE, SIZE, LOCATION AND DEPTH OF ALL THE UTILITY CROSSING (BOTH MAINS AND LATERALS) ARE CORRECT AS SHOWN. NO GUARANTEE IS MADE THAT ALL EXISTING UTILITIES (BOTH MAINS AND LATERALS) ARE SHOWN. THE CONTRACTOR SHALL EXERCISE CAUTION WHEN EXCAVATING AND SHALL PROTECT ALL EXISTING UTILITIES (BOTH MAINS AND LATERALS) FROM DAMAGE DUE TO HIS OPERATION.
8. VERTICAL SEPARATION REQUIREMENTS (UNLESS SPECIFICALLY SHOWN OTHERWISE ON PLANS):

   A MINIMUM OF SIX (6) INCHES VERTICAL CLEARANCE, MEASURED FROM OUTSIDE EDGE OF PIPE, SHALL BE PROVIDED BETWEEN CROSSING UTILITY PIPES, EXCEPT THAT THE MINIMUM VERTICAL CLEARANCE BETWEEN WATER AND SANITARY SEWER PIPELINES SHALL BE 12 INCHES AND ALL NEW WATER PIPES SHALL BE TYPICALLY INSTALLED TO CROSS ABOVE/OVER EXISTING SANITARY SEWER PIPELINES.

   WHERE NEW WATER PIPELINES ARE REQUIRED TO CROSS UNDER EXISTING AND/OR NEW SANITARY SEWER PIPELINES, THE MINIMUM VERTICAL SEPARATION SHALL BE 12 INCHES. WATER LINE PIPE ENDS SHALL BE INSTALLED NO CLOSER THAN 10' MINIMUM HORIZONTAL DISTANCE FROM CENTERLINE OF UTILITY CROSSINGS, WHERE FEASIBLE.

1 9. HORIZONTAL SEPARATION REQUIREMENTS (UNLESS SPECIFICALLY SHOWN OTHERWISE ON PLANS):

   A MINIMUM HORIZONTAL SEPARATION BETWEEN NEW PIPELINES AND ANY EXISTING UTILITIES SHALL BE 5' FEET, EXCEPT THAT THE MINIMUM HORIZONTAL SEPARATION FOR WATER AND SANITARY SEWER MAIN PIPELINES SHALL BE 10' MINIMUM.

   A MINIMUM HORIZONTAL SEPARATION BETWEEN NEW PIPELINES AND JOINT TRENCH SHALL BE 5 FEET.
10. THE CONTRACTOR SHALL BE RESPONSIBLE FOR CONTACTING APPROPRIATE UTILITIES AND REQUESTING VERIFICATION OF SERVICE POINTS, FIELD VERIFICATION OF LOCATION, SIZE, DEPTH, ETC. FOR ALL THEIR FACILITIES AND TO COORDINATE WORK SCHEDULES.
11. ANY EXISTING UNDERGROUND UTILITY LINES TO BE ABANDONED, SHALL BE REMOVED FROM WITHIN THE PROPOSED BUILDING ENVELOPE AND THEIR ENDS CAPPED OUTSIDE OF THE BUILDING ENVELOPE.
12. ANY PIPING TO BE ABANDONED IN PLACE SHALL BE FILLED WITH GROUT AND CAPPED.

GENERAL SITE NOTES

1. CONTRACTOR SHALL VISIT THE SITE PRIOR TO BIDDING ON THIS WORK AND CONSIDER THE EXISTING CONDITIONS AND SITE CONSTRAINTS IN THE BID. CONTRACTOR SHALL BE IN THE POSSESSION OF AND FAMILIAR WITH ALL APPLICABLE GOVERNING AGENCIES STANDARD DETAILS AND SPECIFICATIONS PRIOR TO SUBMITTING OF A BID.
2. ALL WORK ON-SITE AND IN THE PUBLIC RIGHT-OF-WAY SHALL CONFORM TO ALL APPLICABLE GOVERNING AGENCIES STANDARD DETAILS & SPECIFICATIONS.
3. PRIOR TO BEGINNING WORK, AND AFTER INITIAL HORIZONTAL CONTROL STAKING, CONTRACTOR SHALL FIELD CHECK ALL ELEVATIONS MARKED WITH (E) AND REPORT ANY DISCREPANCIES GREATER THAN 0.05' TO THE ENGINEER.
4. DAMAGE TO ANY EXISTING SITE IMPROVEMENTS, UTILITIES AND/OR SERVICES TO REMAIN SHALL BE RESPONSIBILITY OF THE CONTRACTOR. CONTRACTOR SHALL REPAIR AND/OR REPLACE IN KIND.
5. CONTRACTOR AGREES THAT HE SHALL ASSUME SOLE AND COMPLETE RESPONSIBILITY FOR JOB SITE CONDITIONS DURING THE COURSE OF CONSTRUCTION OF THIS PROJECT INCLUDING SAFETY OF ALL PERSONS AND PROPERTY THAT THIS REQUIREMENT SHALL APPLY CONTINUOUSLY AND NOT BE LIMITED TO NORMAL WORKING HOURS AND THAT THE CONTRACTOR SHALL DEFEND INDEMNIFY AND HOLD THE CLIENT, THE CONSULTING ENGINEER AND THE CITY HARMLESS FROM ANY AND ALL LIABILITY, REAL OR ALLEGED, IN CONNECTION WITH THE PERFORMANCE OF WORK ON THIS PROJECT, EXCEPTING FOR LIABILITY ARISING FROM THE SOLE NEGLIGENCE OF THE CLIENT OR THE CONSULTING ENGINEER.

TREE PROTECTION

1. PRIOR TO BEGINNING CONSTRUCTION ON SITE, CONTRACTOR SHALL IDENTIFY AND PROTECT EXISTING TREES AND PLANTS DESIGNATED AS TO REMAIN.
2. PROTECT EXISTING TREES TO REMAIN FROM SPILLED CHEMICALS, FUEL OIL, MOTOR OIL, GASOLINE AND ALL OTHER CHEMICALLY INJURIOUS MATERIAL; AS WELL AS FROM PUDDLING OR CONTINUOUSLY RUNNING WATER. SHOULD A SPILL OCCUR, STOP WORK IN THAT AREA AND CONTACT THE CITY'S ENGINEER/INSPECTOR IMMEDIATELY. CONTRACTOR SHALL BE RESPONSIBLE TO MITIGATE DAMAGE FROM SPILLED MATERIAL AS WELL AS MATERIAL CLEAN UP.
3. CONTRACTOR SHALL BE RESPONSIBLE FOR ONGOING MAINTENANCE OF ALL TREES DESIGNATED TO REMAIN AND FOR MAINTENANCE OF RELOCATED TREES STOCKPILED DURING CONSTRUCTION. CONTRACTOR WILL BE REQUIRED TO REPLACE TREES THAT DIE DUE TO LACK OF MAINTENANCE.
4. REFER TO LANDSCAPE PLANS, SPECIFICATIONS OR ARBORIST REPORT FOR TREE PROTECTION REQUIREMENTS AND MEASURES.

PROJECT SITE MAINTENANCE

1. REMOVE ALL DIRT, GRAVEL, RUBBISH, REFUSE, AND GREEN WASTE FROM STREET PAVEMENT AND STORM DRAINS ADJOINING THE SITE. LIMIT CONSTRUCTION ACCESS ROUTES ONTO THE SITE AND PLACE GRAVEL PADS AT THESE LOCATIONS. DO NOT DRIVE VEHICLES AND EQUIPMENT OFF THE PAVED OR GRAVELED AREAS DURING WET WEATHER.
2. SWEEP OR VACUUM THE STREET PAVEMENT AND SIDEWALKS ADJOINING THE PROJECT SITE AND THE ON-SITE PAVED AREAS ON A DAILY BASIS. SCRAPE CAKED-ON MUD AND DIRT FROM THESE AREAS BEFORE SWEEPING. CORNERS AND HARD TO REACH AREAS SHALL BE SWEPT MANUALLY.
3. CREATE A CONTAINED AND COVERED AREA ON THE SITE FOR THE STORAGE OF BAGS, CEMENT, PAINTS, OILS, FERTILIZERS, PESTICIDES, OR OTHER MATERIALS USED ON THE SITE THAT HAVE THE POTENTIAL OF BEING DISCHARGED INTO THE STORM DRAIN SYSTEM THROUGH EITHER BEING WIND-BLOWN OR IN THE EVENT OF A MATERIAL SPILL.
4. NEVER CLEAN MACHINERY, EQUIPMENT OR TOOLS INTO A STREET, GUTTER OR STORM DRAIN.
5. ENSURE THAT CEMENT TRUCKS, PAINTERS, OR STUCCO/PLASTER FINISHING CONTRACTORS DO NOT DISCHARGE WASH WATER FROM EQUIPMENT, TOOLS OR RINSE CONTAINERS INTO GUTTERS OR DRAINS.

Cuschieri Horton Architects
1475 S. Bascom Ave, Suite 204
Campbell, California 95008
408.371.8200 Fx 408.371.8201

SANDIS
CIVIL ENGINEERS
SURVEYORS
PLANNERS
1700 S. Winchester Blvd,
Suite 200, Campbell, CA 95008
P. 408.636.0900
F. 408.636.0999
www.sandis.net
SILICON VALLEY TRI-VALLEY CENTRAL VALLEY
SACRAMENTO EAST BAY/ SF

DATE JULY 17, 2020

REGISTERED PROFESSIONAL ENGINEER
CHAD J. BROWNING
No. C68315
Exp. 9/30/21
CIVIL
STATE OF CALIFORNIA

CHAD J. BROWNING
R.C.E. NO. 68315,
EXPIRES 9-30-21

CONSTRUCTION NOTES

TOWN OF LOS GATOS
ENGINEERING BUILDING TI ~~AND STORAGE BUILDING~~
41 MILES AVENUE,
LOS GATOS, CA 95030

REVISIONS

NO.	ITEM	DATE
1	FIRST REVIEW COMMENTS	7/17/20

PERMIT #:

SUBMITTAL:
100% SUBMITTAL SET
DRAWN BY: AL
CHECKED BY: SY
JOB NO: 218290
DATE: 07/17/20

SHEET NO.
C-1.1

File: S:\218290\(4) ENGINEERING\(2) PLAN SETS\(3) SHEET SET\ONSITE\C-1.1-CONSTRUCTION NOTES.dwg Date:Jul 21, 2020 - 4:27pm, spotel

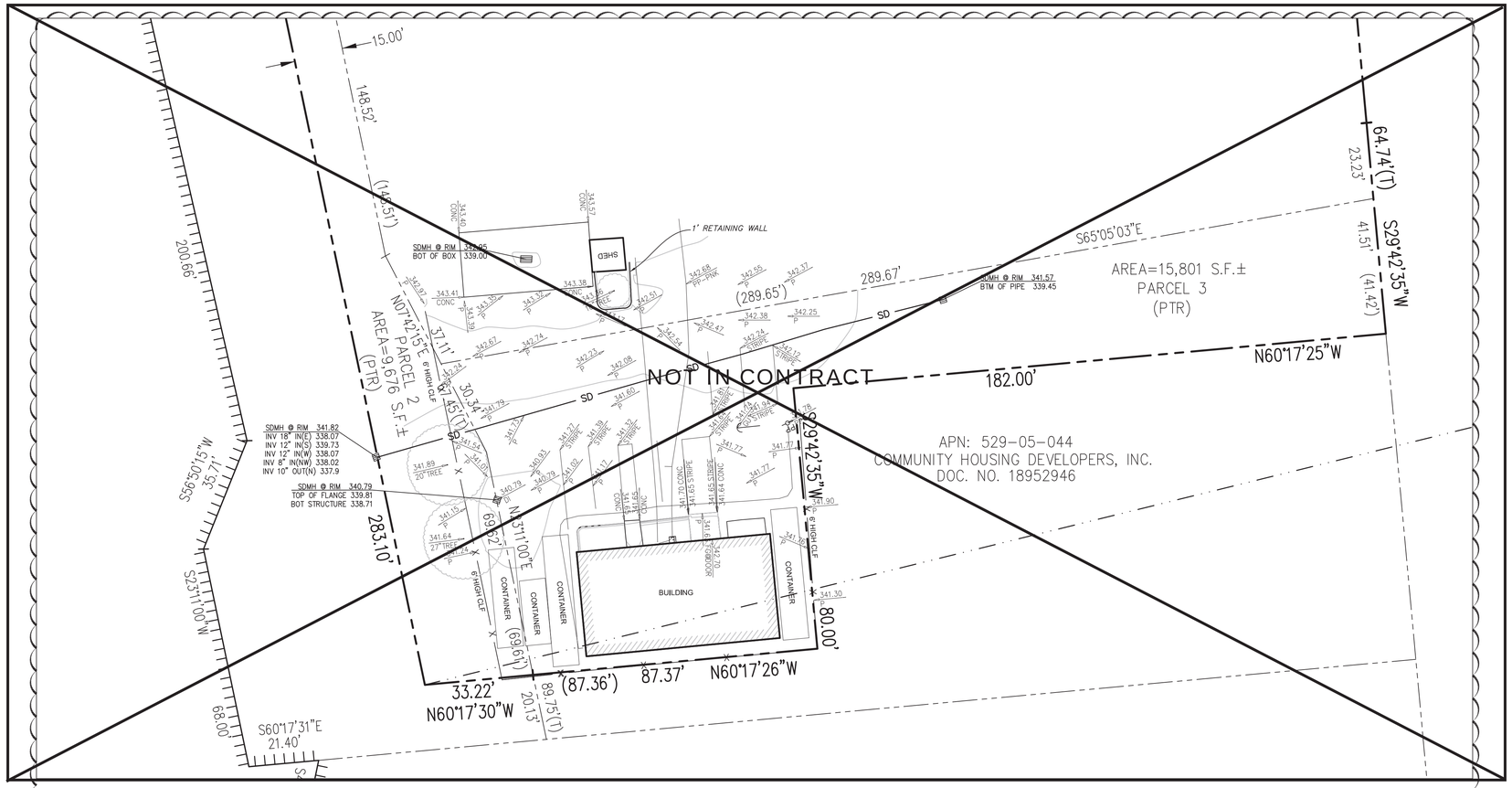

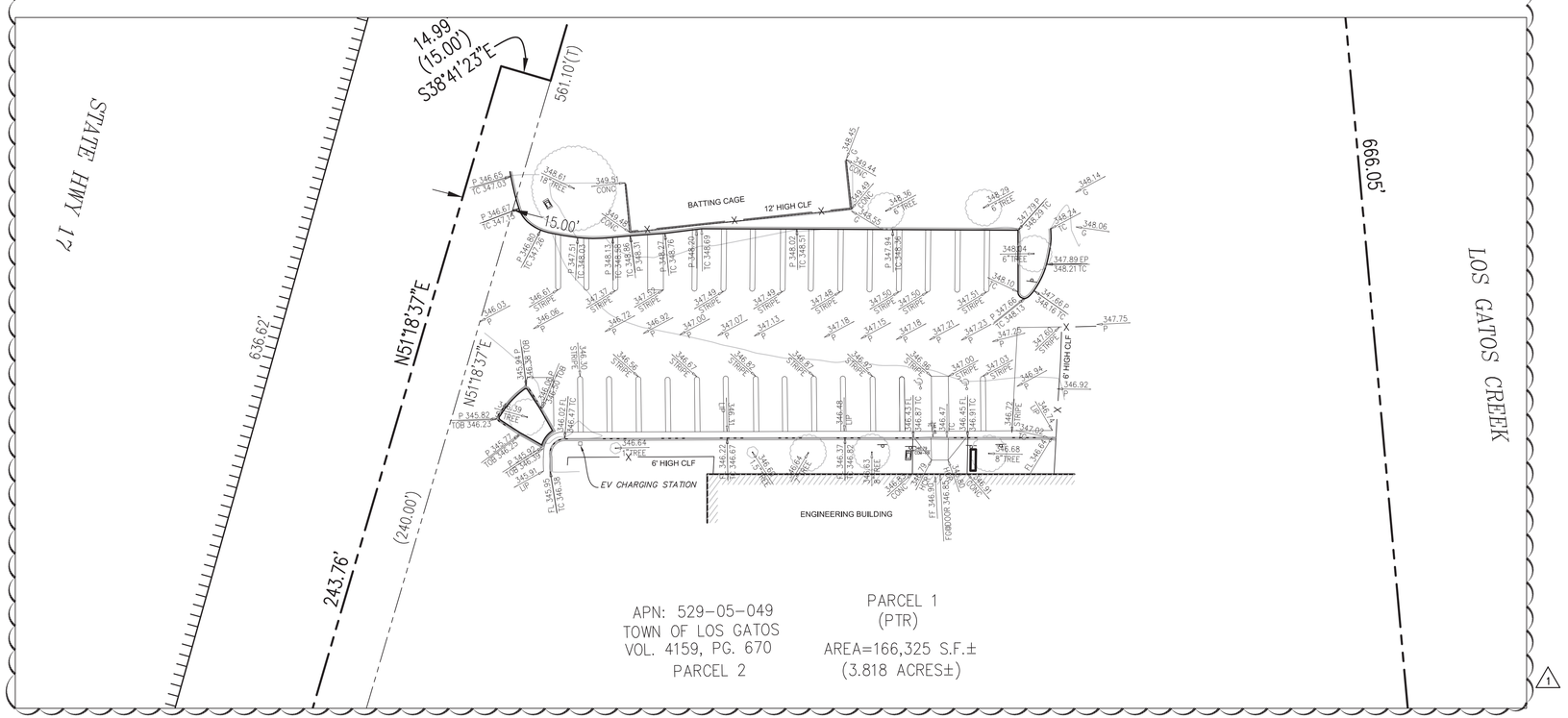

SANDIS
SILICON VALLEY

SCALE: 1"=20'

ASSUMED NORTH

SURVEY NOTES

1. *EXISTING TOPOGRAPHIC SURVEY INFORMATION SHOWN HEREON IS BASED UPON TOPOGRAPHIC SURVEYS COMPLETED BY SANDIS, UNDER THE DIRECTION OF LAURA CABRAL, PLS 7756.*
2. *UTILITIES SHOWN ON THIS SURVEY ARE BASED ON SURFACE OBSERVATIONS. NO WARRANTIES ARE EXPRESSED OR IMPLIED CONCERNING THE EXISTENCE, SIZE, DEPTH, CONDITION, CAPACITY, OR LOCATION OR ANY UTILITY EXISTING ON THE SITE, WHETHER PRIVATE, MUNICIPAL, OR PUBLIC OWNED.*
3. *CONTRACTOR SHALL VERIFY ALL UTILITIES PRIOR TO CONSTRUCTION AND REPORT BACK TO CIVIL ENGINEER ANY DISCREPANCIES WITH PLAN PRIOR TO COMMENCEMENT OF WORK.*
4. *TREE LOCATIONS SHOWN HEREON ARE SHOWN SYMBOLICALLY WITH SYMBOL SIZES BASED UPON TRUNK DIAMETER AT CHEST HEIGHT, AT THE LOCATION WHERE THE TREE ENTERS THE GROUND SURFACE. LOCATIONS AND SIZES OF TREE TRUNKS CAN ONLY BE CONSIDERED APPROXIMATE UNLESS OTHERWISE STATED ON THE MAP. TREES OF TRUNK DIAMETER SIZES OF 6 INCHES OR GREATER WERE LOCATED BY THE FIELD CREW.*
5. *ALL DISTANCES AND DIMENSIONS ARE SHOWN IN FEET AND DECIMALS THEREOF.*
6. *DATES OF FIELD SURVEY: 11/27/2018–11/28/2018*
7. *OVERHEAD ELECTRIC LINES ARE NOT SHOWN ON THIS MAP.*
8. *LOT LINES & RIGHT-OF-WAY LINES WERE BASED ON RECORD INFORMATION ONLY. A FORMAL BOUNDARY SURVEY MAY REQUIRE THE BENEFIT OF A PRELIMINARY TITLE REPORT.*

BENCHMARK

THE ELEVATION REFERENCE FOR THIS SURVEY IS A SANTA CLARA VALLEY WATER DISTRICT BENCHMARK, BM ID 1003, DESCRIBED BRASS DISK STAMPED "SCVWD BM #1003" ON TOP OF CONCRETE WALK; AT THE SOUTH CORNER INTERSECTION OF SOUTH SANTA CRUZ AVE AND WEST MAIN STREET.

ELEV=417.71 FEET (NAVD 88 DATUM)

UNDERGROUND UTILITY NOTE

THE TYPES, LOCATIONS, SIZES AND/OR DEPTHS OF EXISTING UNDERGROUND UTILITIES AS SHOWN ON THIS TOPOGRAPHIC SURVEY ARE APPROXIMATE AND WERE OBTAINED FROM SOURCES OF VARYING RELIABILITY. ONLY ACTUAL EXCAVATION WILL REVEAL THE TYPES, EXTENT, SIZES, LOCATIONS AND DEPTHS OF SUCH UNDERGROUND UTILITIES. A REASONABLE EFFORT HAS BEEN MADE TO LOCATE AND DELINEATE ALL KNOWN UNDERGROUND UTILITIES. HOWEVER, THE ENGINEER CAN ASSUME NO RESPONSIBILITY FOR THE COMPLETENESS OR ACCURACY OF ITS DELINEATION OF SUCH UNDERGROUND UTILITIES WHICH MAY BE ENCOUNTERED, BUT WHICH ARE NOT SHOWN ON THIS SURVEY.

BOUNDARY NOTE

BOUNDARY PERFORMED BY LUK & ASSOCIATES.

Cuschieri Horton Architects
1475 S. Bascom Ave, Suite 204
Campbell, California 95008
408.371.8200 Fx 408.371.8201

SANDIS
CIVIL ENGINEERS
SURVEYORS
PLANNERS
1700 S. Winchester Blvd.
Suite 200, Campbell, CA 95008
P. 408.636.0900
F. 408.636.0999
www.sandis.net
SILICON VALLEY TRI-VALLEY CENTRAL VALLEY
SACRAMENTO EAST BAY/ SF

DATE JULY 17, 2020

REGISTERED PROFESSIONAL ENGINEER
CHAD J. BROWNING
No. C68315
Exp. 9/30/21
CIVIL
STATE OF CALIFORNIA

CHAD J. BROWNING
R.C.E. NO. 68315,
EXPIRES 9-30-21

TOPOGRAPHIC SURVEY

TOWN OF LOS GATOS
ENGINEERING BUILDING TI ~~AND STORAGE BUILDING~~
41 MILES AVENUE,
LOS GATOS, CA 95030

REVISIONS

NO.	ITEM	DATE
1	FIRST REVIEW COMMENTS	7/17/20

PERMIT #:

SUBMITTAL:
100% SUBMITTAL SET

DRAWN BY: AL
CHECKED BY: SY

JOB NO: 218290
DATE: 07/17/20

SHEET NO.
C-1.2

File: S:\218290\(4) ENGINEERING\(2) PLAN SETS\(3) SHEET SET\ONSITE\C-1.2-TOPO.dwg Date:Jul 21, 2020 - 4:27pm, spotel

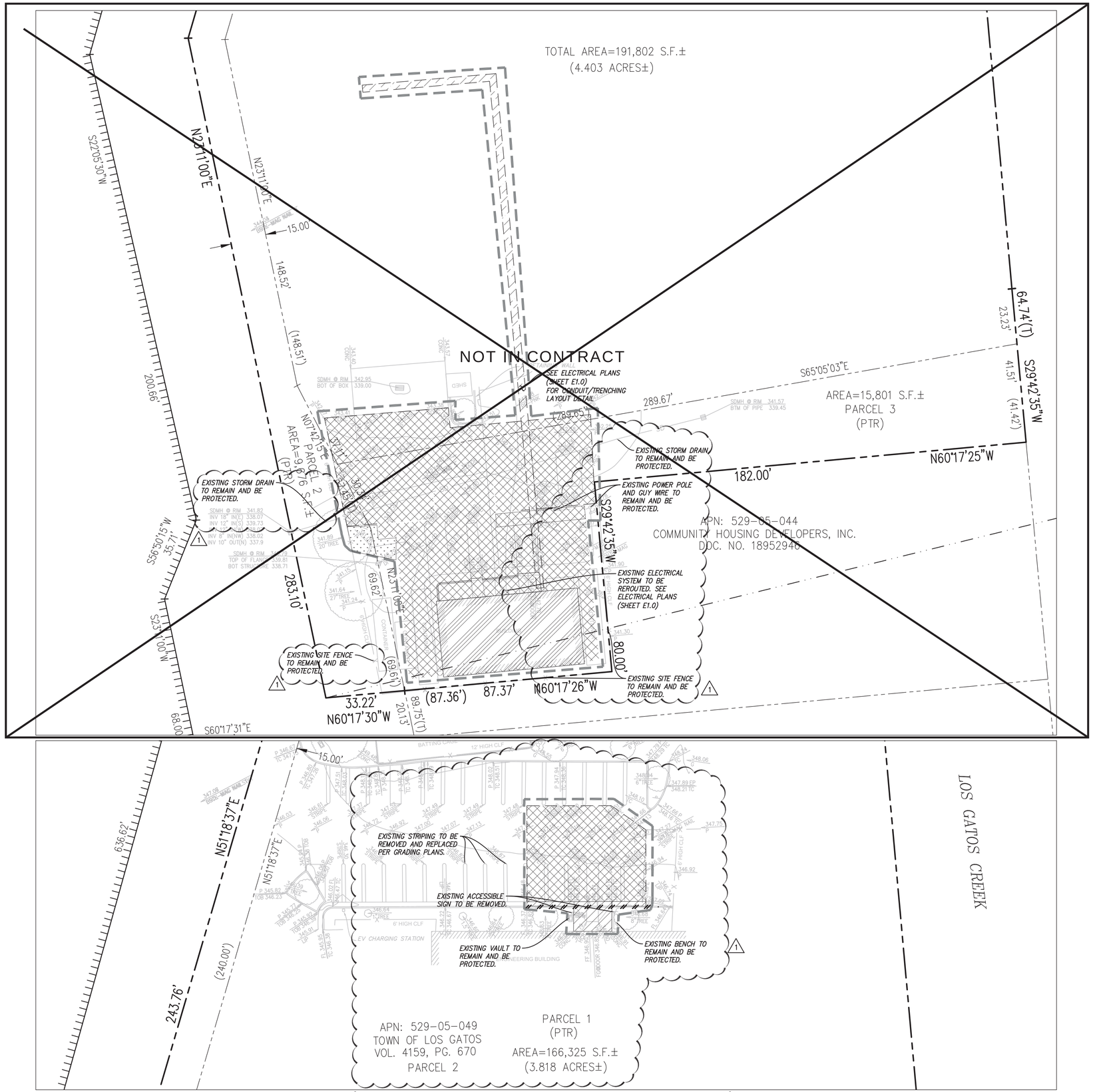

SANDIS
SILICON VALLEY

SCALE: 1"=20'

DEMOLITION LEGEND

- DEMOLISH AND REMOVE AC PAVING AND ANY ASSOCIATED BASEROCK. STABILIZE THE EXISTING SUBGRADE. DEMOLISHED MATERIAL MAY BE USED AS BASEROCK IF APPROVED BY GEOTECHNICAL ENGINEER.
- DEMOLISH AND REMOVE CONCRETE INCLUDING ANY ASSOCIATED BASEROCK AND REBAR. STABILIZE THE EXISTING SUBGRADE. DEMOLISHED MATERIAL MAY BE USED AS BASEROCK IF APPROVED BY THE GEOTECHNICAL ENGINEER.
- CLEAR AND GRUB EXISTING LANDSCAPE AREA SO NO ORGANICS ARE STILL PRESENT.
- DEMOLISH AND REMOVE EXISTING BUILDING, SEE ARCHITECTURAL PLANS FOR EXTENT OF BUILDING DEMOLITION. STABILIZE THE EXISTING SUBGRADE.
- LIMIT OF WORK LINE
- SAWCUT — SAWCUT LINE, CONTRACTOR SHALL SAWCUT WITH A NEAT, CLEAN EDGE. SAWCUT CONCRETE AT NEAREST JOINT TO SAWCUT LINE SHOWN ON PLAN.
- REMOVE EXISTING CURB AND GUTTER.
- REMOVE EXISTING TREE AND ROOTBALL. COORDINATE WITH LANDSCAPE ARCHITECT AND PROJECT ARBORIST PRIOR TO REMOVING ANY TREES.

DEMOLITION NOTES

1. CONTRACTOR SHALL INSTALL TREE PROTECTION FOR EXISTING TREES TO REMAIN. SEE LANDSCAPE DRAWINGS AND ARBORIST REPORT FOR TREE PROTECTION REQUIREMENTS.
2. CONTRACTOR TO REFER TO GEOTECHNICAL REPORT FOR ALL TRENCH BACKFILL RECOMMENDATIONS FOR ALL EXISTING UTILITIES THAT ARE TO BE REMOVED.
3. CONTRACTOR TO DEMOLISH AND REMOVE ALL IRRIGATION IN LANDSCAPE AREAS WITHIN THE LIMIT OF WORK. IF ANY IRRIGATION LINES OR MAINS ARE IN THE LIMIT OF WORK OR ARE DAMAGED THAT SERVE LANDSCAPE TO REMAIN, CONTRACTOR TO RECONNECT OR RELOCATE AT NO ADDITIONAL COST TO OWNER.
4. ALL UNDERGROUND UTILITIES, LANDSCAPE FEATURES, AND HARDSCAPE FEATURES NOT SHOWN TO BE REMOVED THAT ARE IMPACTED OR DAMAGED BY THE CONTRACTOR OR THEIR SUB-CONTRACTORS SHALL BE REMOVED AND REPLACED IN KIND. ITEMS MAY INCLUDE, BUT NOT LIMITED TO, UNDERGROUND UTILITY AND IRRIGATION LINES, CURB, GUTTER, SIDEWALK, PAVEMENT, FENCING, STRIPING AND OTHER PAVEMENT MARKINGS, PLANTING, LANDSCAPING, AND BOLLARDS.
5. PROTECT ALL EXISTING UTILITIES IN PLACE UNLESS OTHERWISE NOTED. REPLACE ANY DAMAGED UTILITY TO REMAIN TO KEEP OPERABLE DURING CONSTRUCTION.
6. THIS DEMOLITION PLAN IS NOT A COMPLETE INVENTORY OF UTILITIES OR STRUCTURES. CONTRACTOR SHALL CONTACT ENGINEER IF ANY UNKNOWN OR UNEXPECTED UTILITIES OR OTHER STRUCTURES ARE FOUND. THE CONTRACTOR IS RESPONSIBLE FOR ALL DEMOLITION NECESSARY TO PREPARE THE SITE FOR DEVELOPMENT.
7. ALL UTILITY DEMOLITION TO BE DISCONNECTED AND CAPPED WHERE SHOWN ON THE PLAN PER UTILITY OWNERS SPECIFICATIONS AND STANDARDS.
8. ALL UTILITY SHUT DOWNS ARE TO BE AVOIDED. IF SHUT DOWNS ARE NECESSARY, CONTRACTOR TO COORDINATE SHUT DOWN WITH UTILITY OWNER WITH 48 HOUR MINIMUM NOTICE.
9. CONTRACTOR TO COORDINATE WITH PG&E WHEN WORKING AROUND UTILITY LINES AND HAVE APPROPRIATE PG&E PERSONNEL ON SITE AS REQUIRED.
10. CONTRACTOR TO POTHOLE AND VERIFY ALL EX. UTILITIES PRIOR TO DEMOLITION.
11. ALL EXISTING STORM DRAIN, SANITARY SEWER, AND WATER MAINS THAT SERVE EXISTING BUILDINGS MUST REMAIN OPERABLE DURING CONSTRUCTION. CONTRACTOR TO SET UP TEMPORARY SERVICE OR PUMP AS NECESSARY TO ENSURE UNINTERRUPTED SERVICE.

Cuschieri Horton Architects
1475 S. Bascom Ave, Suite 204
Campbell, California 95008
408.371.8200 Fx 408.371.8201

SANDIS
CIVIL ENGINEERS
SURVEYORS
PLANNERS
1700 S. Winchester Blvd.
Suite 200, Campbell, CA 95008
P. 408.636.0900
F. 408.636.0999
www.sandis.net
SILICON VALLEY | TRI-VALLEY | CENTRAL VALLEY
SACRAMENTO | EAST BAY/ SF

DATE JULY 17, 2020

REGISTERED PROFESSIONAL ENGINEER
CHAD J. BROWNING
No. C68315
Exp. 9/30/21
CIVIL
STATE OF CALIFORNIA

CHAD J. BROWNING
R.C.E. NO. 68315,
EXPIRES 9-30-21

DEMOLITION PLAN

TOWN OF LOS GATOS
ENGINEERING BUILDING TI ~~AND STORAGE BUILDING~~
41 MILES AVENUE,
LOS GATOS, CA 95030

REVISIONS

NO.	ITEM	DATE
1	FIRST REVIEW COMMENTS	7/17/20

PERMIT #:

SUBMITTAL:
100% SUBMITTAL SET
DRAWN BY: AL
CHECKED BY: SY
JOB NO: 218290
DATE: 07/17/20

SHEET NO.
C-2.0

File: S:\218290\(4) ENGINEERING\(2) PLAN SETS\(3) SHEET SET\ONSITE\C-2.0-DEMO.dwg Date: Jul 21, 2020 - 4:27pm, spatel

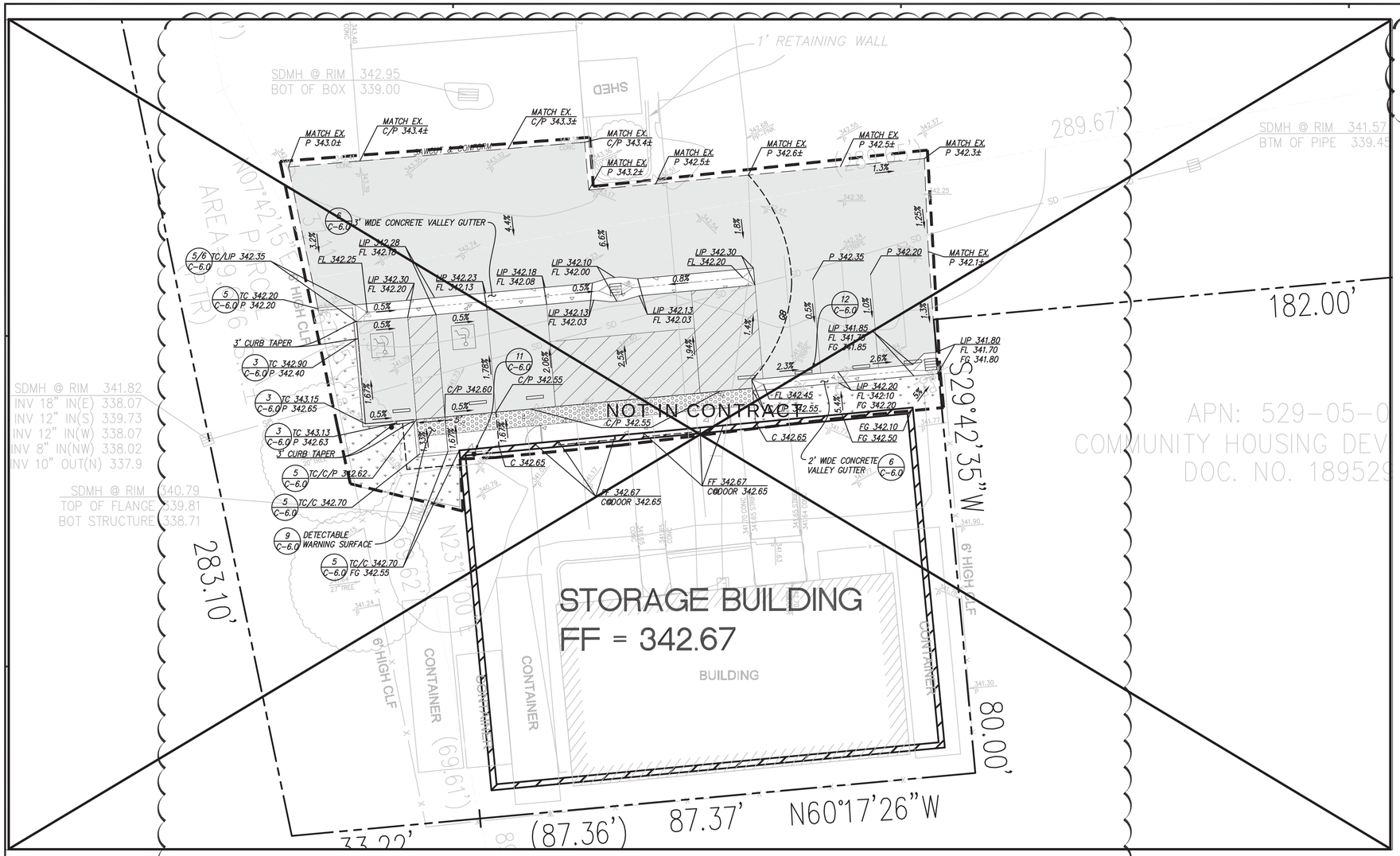

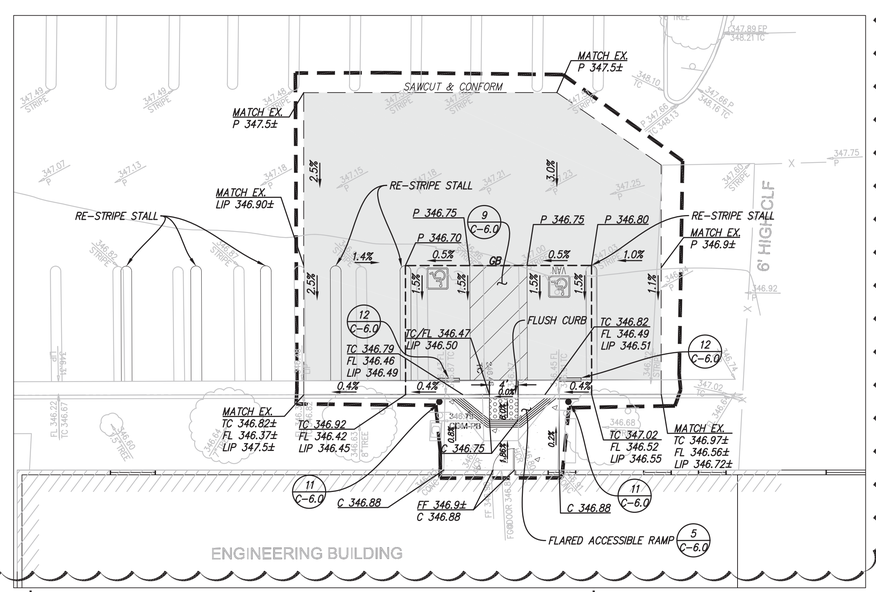

SANDIS SILICON VALLEY

SCALE: 1"=10'

GRADING PLAN LEGEND

- CONCRETE PAVING (1 / C-6.0)
- ASPHALT CONCRETE PAVING (2 / C-6.0)
- LANDSCAPE AREA, SEE LANDSCAPE PLANS FOR DETAILS
- LIMIT OF WORK LINE
- GRADE BREAK
- FLOWLINE

GRADING NOTES

1. PROVIDE POSITIVE SURFACE DRAINAGE AWAY FROM ALL STRUCTURES BY SLOPING ALL HARDSCAPE SURFACES AT 2% AND LANDSCAPE SURFACES AT 5% AWAY FROM STRUCTURES UNLESS OTHERWISE NOTED ON PLANS.
2. STRUCTURE WALLS: PER CBC 2304.11.2.2 (WOOD SUPPORTED BY FOUNDATION) PROVIDE 8" MINIMUM CLEAR TO EXTERIOR GRADE.
3. ALL FILL, IMPORT SOILS AND GRADING SHALL BE IN CONFORMANCE WITH THE GEOTECHNICAL REPORT PERFORMED BY XXX, DATED XXX, PROJECT NUMBER XXX
4. COORDINATE THE PLACEMENT OF ALL SLEEVES FOR LANDSCAPE IRRIGATION (WATER AND CONTROL WIRING) AND SITE LIGHTING PRIOR TO THE PLACEMENT OF ANY ASPHALT, BASEROCK OR CONCRETE SURFACING. SEE LANDSCAPING AND SITE ELECTRICAL DRAWINGS.
5. ROUGH GRADING TO BE WITHIN 0.1' AND FINISH GRADES ARE TO BE WITHIN 0.05', HOWEVER CONTRACTOR SHALL NOT CONSTRUCT ANY IMPROVEMENTS THAT WILL CAUSE WATER TO POND OR NOT MEET REQUIREMENTS IN GRADING NOTE #1 OR THE ADA REQUIREMENTS BELOW. DO NOT ADJUST GRADES ON THIS PLAN WITHOUT PRIOR WRITTEN APPROVAL OF THE ENGINEER/ARCHITECT.
6. THE CONTRACTOR SHALL EXERCISE EXTREME CARE TO CONFORM TO THE LINES, GRADES, SECTIONS, AND DIMENSIONS AS SET FORTH ON THESE PLANS. ALL GRADED AREAS SHALL CONFORM TO THE VERTICAL ELEVATIONS SHOWN WITH A TOLERANCE OF ONE-TENTH OF A FOOT. WHERE GRADED AREAS DO NOT CONFORM TO THESE TOLERANCES, THE CONTRACTORS SHALL BE REQUIRED TO DO CORRECTIVE GRADING, AT NO EXTRA COST TO THE CLIENT.
7. IT SHALL BE THE CONTRACTOR'S RESPONSIBILITY TO CONFIRM THE GROUND ELEVATIONS AND OVERALL TOPOGRAPHY OF THE SITE PRIOR TO THE START OF CONSTRUCTION AS TO THE ACCURACY BETWEEN THE WORK SET FORTH ON THESE PLANS AND THE WORK IN THE FIELD. ANY DISCREPANCIES SHALL BE IMMEDIATELY BROUGHT TO THE ATTENTION OF THE CONSTRUCTION MANAGER AND CIVIL ENGINEER IN WRITING PRIOR TO START OF CONSTRUCTION WHICH MAY REQUIRE CHANGES IN DESIGN AND/OR AFFECT THE EARTHWORK QUANTITIES.
8. ALL GRADING SHALL CONFORM TO APPROVED SPECIFICATIONS PRESENTED HEREON OR ATTACHED HERETO. ALL GRADING WORK SHALL BE OBSERVED AND APPROVED BY THE SOILS ENGINEER. THE SOILS ENGINEER SHALL BE NOTIFIED AT LEAST 48 HOURS BEFORE BEGINNING ANY GRADING. UNOBSERVED AND UNAPPROVED GRADING WORK SHALL BE REMOVED AND REDONE AT THE CONTRACTORS EXPENSE.
9. THE CONTRACTOR SHALL BE RESPONSIBLE TO REPAIR OR REPLACE ANY EXISTING IMPROVEMENTS OF UNDERGROUND FACILITIES DAMAGED DURING THE CONSTRUCTION PERIOD.
10. THE CONTRACTOR SHALL BE RESPONSIBLE FOR OBTAINING ALL ENCROACHMENT, EXCAVATION, CONCRETE, ELECTRICAL, PLUMBING, ETC. PERMITS NECESSARY PRIOR TO BEGINNING CONSTRUCTION FOR ANY WORK.
11. THE RISE/ RUN/ STEP COUNT IS FOR REFERENCE ONLY. THE CONTRACTOR SHALL VERIFY ELEVATIONS AND BUILDING CODE COMPLIANCE PRIOR TO ANY WORK.
12. AREAS LACKING TOPOGRAPHIC INFORMATION (ELEVATIONS) HAVE BEEN INTERPOLATED USING STANDARD ENGINEERING METHODS. CONTRACTOR SHALL FIELD VERIFY ALL ELEVATIONS AT CONFORMS PRIOR TO COMMENCEMENT OF CONSTRUCTION AND REPORT BACK ANY DISCREPANCIES TO THE CIVIL ENGINEER.
13. ADJUST ANY MANHOLE OR UTILITY STRUCTURES TO PROPOSED GRADE PRIOR TO INSTALLING FINAL LIFT OF AC OR POURING CONCRETE.

ADA NOTES

1. ALL HARDSCAPE ALONG THE ADA PATH OF TRAVEL SHALL BE IN CONFORMANCE WITH TITLE 24 OF THE CALIFORNIA ADMINISTRATIVE CODE.
2. SLOPED WALKS ALONG THE DESIGNATED ADA PATH OF TRAVEL SHALL NOT EXCEED A SLOPE OF 1:20 (5%) WITHOUT HANDRAILS. THE MAXIMUM SLOPE WITH HANDRAILS OR FOR CURB RAMPS IS 1:12 (8.33%). LEVEL LANDINGS ARE REQUIRED AT THE TOP AND BOTTOM OF ALL SLOPED WALKWAYS AND RAMPS.
3. WALKWAYS ON ANY PATH OF TRAVEL SHALL HAVE A MINIMUM WIDTH OF 48". WALKWAYS AND ADA PARKING STALLS OR LOADING ZONES SHALL HAVE A 2% MAXIMUM CROSS SLOPE.
4. A LEVEL LANDING (2% MAX SLOPE) SHALL BE PROVIDED AT ALL ACCESSIBLE ENTRANCES TO BUILDINGS, THE LANDINGS SHALL HAVE A MINIMUM WIDTH OF 60" AND A MINIMUM DEPTH OF 60" WHEN THE DOOR OPENS INTO THE BUILDING, AND 42" PLUS THE WIDTH OF THE DOOR WHEN THE DOOR OPEN ONTO THE LANDING.
5. RAMPS GREATER THAN 1:20 SLOPE AND EXCEEDING 30" IN VERTICAL ELEVATION CHANGE SHALL HAVE INTERMEDIATE LEVEL LANDINGS.

Cuschieri Horton Architects
1475 S. Bascom Ave, Suite 204
Campbell, California 95008
408.371.8200 Fx 408.371.8201

SANDIS
CIVIL ENGINEERS
SURVEYORS
PLANNERS
1700 S. Winchester Blvd.
Suite 200, Campbell, CA 95008
P. 408.636.0900
F. 408.636.0999
www.sandis.net
SILICON VALLEY TRI-VALLEY CENTRAL VALLEY
SACRAMENTO EAST BAY/ SF

DATE JULY 17, 2020

REGISTERED PROFESSIONAL ENGINEER CHAD J. BROWNING No. C68315 Exp. 9/30/21 CIVIL STATE OF CALIFORNIA

CHAD J. BROWNING
R.C.E. NO. 68315,
EXPIRES 9-30-21

GRADING + DRAINAGE PLAN

TOWN OF LOS GATOS
ENGINEERING BUILDING TI ~~AND STORAGE BUILDING~~
41 MILES AVENUE,
LOS GATOS, CA 95030

REVISIONS

NO.	ITEM	DATE
1	FIRST REVIEW COMMENTS	7/17/20

PERMIT #:

SUBMITTAL:
100% SUBMITTAL SET

DRAWN BY: AL
CHECKED BY: SY

JOB NO: 218290
DATE: 07/17/20

SHEET NO.
C-3.0

File: S:\218290\(4) ENGINEERING\(2) PLAN SETS\(3) SHEET SET\ONSITE\C-3.0-GRADE.dwg Date: Jul 21, 2020 - 4:28pm, spotel

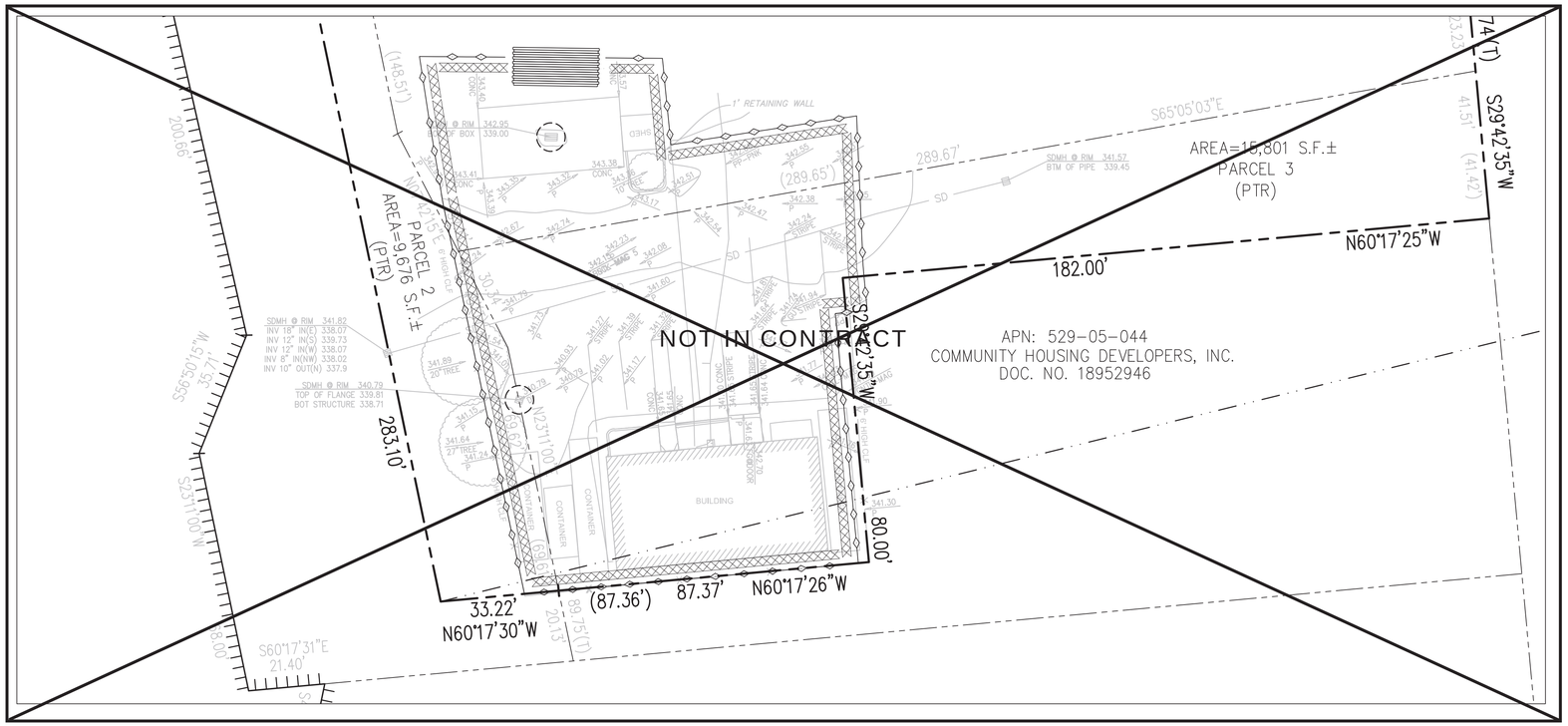

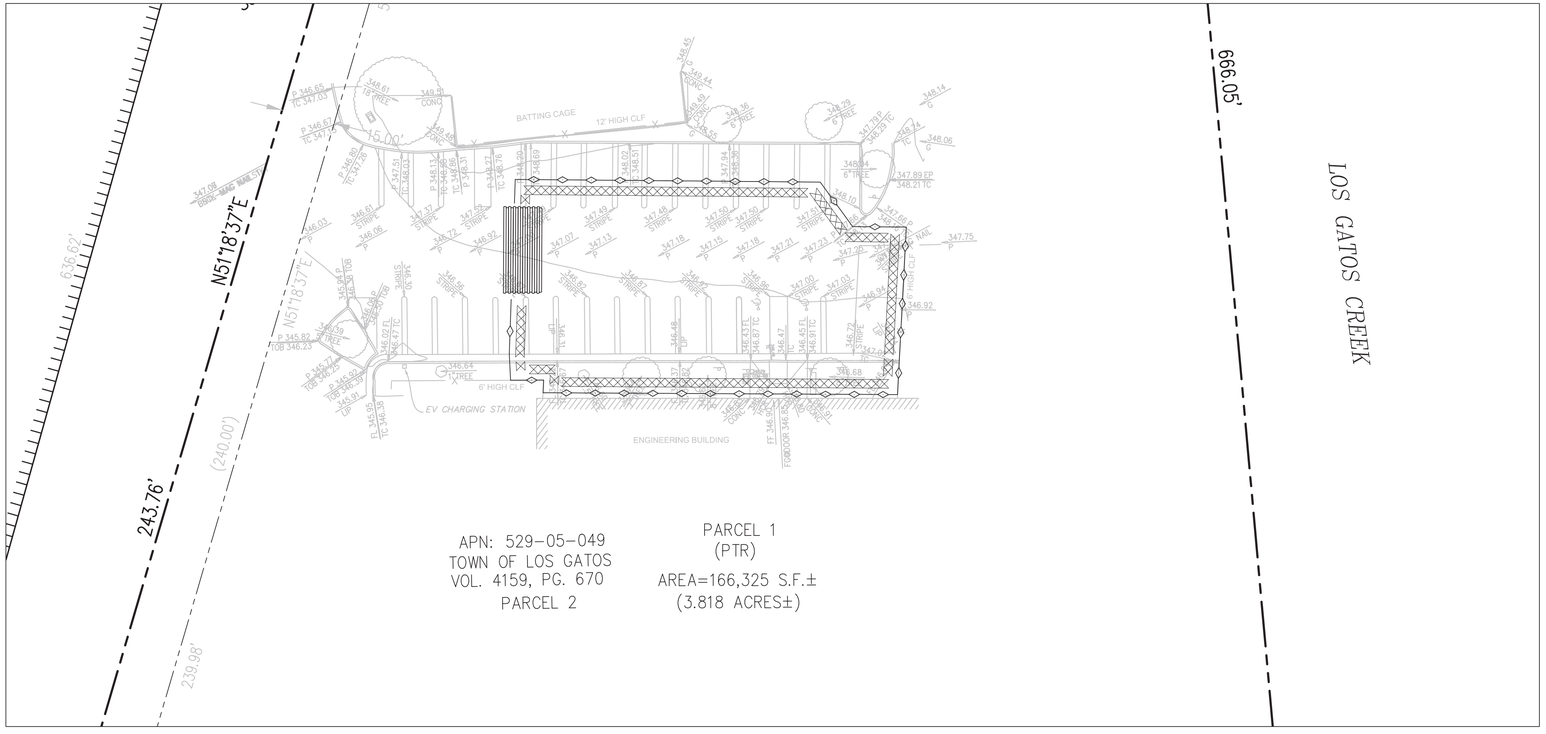

SANDIS SILICON VALLEY — SCALE: 1"=20'

LEGEND

- STABILIZED EXIT (TC-1 / C-5.1)
- FIBER ROLL (SE-5 / C-5.1)
- SILT FENCE (SE-1 / C-5.1)
- INLET PROTECTION (SE-10 / C-5.1)

1

WATER POLLUTION CONTROL NOTES:

A. TEMPORARY CONSTRUCTION ENTRANCE/EXIT LOCATION SHOWN IS APPROXIMATE. CONTRACTOR TO PROVIDE LOCATION WHERE APPROPRIATE.

B. THIS PLAN REPRESENTS POSSIBLE WATER POLLUTION CONTROL MEASURES INCLUDING EROSION CONTROL AND SEDIMENT CONTROL.

C. EXISTING SURFACES SHALL BE UNDISTURBED TO THE EXTENT PRACTICAL.

D. GROUND WATER SHALL NOT BE DISCHARGED WITH STORM WATER. GROUND WATER DEWATERING OPERATIONS SHALL BE COORDINATED AS NEEDED WITH OWNER.

E. CONTRACTOR SHALL PROVIDE EFFECTIVE SOIL COVER FOR AREAS OF CONSTRUCTION ACTIVITY THAT HAVE BEEN DISTURBED AND ARE NOT SCHEDULED TO BE ACTIVE FOR AT LEAST 14 DAYS.

F. ALL EROSION CONTROL AND SEDIMENT CONTROLS TO BE OBTAINED INSTALLED AND MAINTAINED AS REQUIRED IN PROJECT SWPPP.

G. CONTRACTOR TO INSTALL RUN-ON AND RUN-OFF CONTROL MEASURES ACCORDING TO PLANS OR AS NECESSARY TO ENSURE SEDIMENT IS NOT TRANSPORTED FROM SITE.

H. CONTRACTOR TO PROVIDE BACK-UP EROSION PREVENTION MEASURES (SOIL STABILIZATION) WITH SEDIMENT CONTROL MEASURES SUCH AS STRAW WATTLES, SILT FENCE, GRAVEL INLET FILTERS, AND/OR SEDIMENT TRAPS OR BASINS. ENSURE CONTROL MEASURES ARE ADEQUATE, IN PLACE, AND IN OPERABLE CONDITIONS. SEDIMENT CONTROLS, INCLUDING INLET PROTECTION, ARE NECESSARY BUT SHOULD BE A SECONDARY DEFENSE BEHIND GOOD EROSION CONTROL MEASURES.

I. STOCKPILE LOCATION(S) TO BE DETERMINED BY THE CONTRACTOR. COORDINATE WITH SITE QSP.

J. ALL CONCRETE TRUCKS TO USE CHUTE WASH BUCKETS FOR CONCRETE RINSE, ALL CONCRETE PUMPS TO CAPTURE CONCRETE RINSE IN SECONDARY CONTAINMENT AND PROPERLY DISPOSE.

K. STREET SWEEPING SHALL BE CHECKED DAILY TO ENSURE DEPOSITED SEDIMENT AND DEBRIS DOES NOT ENTER THE STORM DRAIN SYSTEM. USE REGENERATIVE VACUUM STREET CLEANER TO MITIGATE AIR AND WATER POLLUTION.

L. RUNOFF THAT HAS CONTACTED AMENDED SOIL AREAS SHALL NOT BE ALLOWED TO LEAVE THE SITE OR ENTER THE STORM DRAIN SYSTEM.

1

Cuschieri Horton Architects
1475 S. Bascom Ave, Suite 204
Campbell, California 95008
408.371.8200 Fx 408.371.8201

SANDIS
CIVIL ENGINEERS
SURVEYORS
PLANNERS
1700 S. Winchester Blvd.
Suite 200, Campbell, CA 95008
P. 408.636.0900
F. 408.636.0999
www.sandis.net
SILICON VALLEY TRI-VALLEY CENTRAL VALLEY
SACRAMENTO EAST BAY/ SF

DATE JULY 17, 2020

REGISTERED PROFESSIONAL ENGINEER CHAD J. BROWNING No. C68315 Exp. 9/30/21 CIVIL STATE OF CALIFORNIA

CHAD J. BROWNING
R.C.E. NO. 68315,
EXPIRES 9-30-21

EROSION CONTROL PLAN

TOWN OF LOS GATOS
ENGINEERING BUILDING TI ~~AND STORAGE BUILDING~~
41 MILES AVENUE,
LOS GATOS, CA 95030

REVISIONS

NO.	ITEM	DATE
1	FIRST REVIEW COMMENTS	7/17/20

PERMIT #:

SUBMITTAL:
100% SUBMITTAL SET

DRAWN BY: AL
CHECKED BY: SY

JOB NO: 218290
DATE: 07/17/20

SHEET NO.
C-5.0

File: S:\218290\(4) ENGINEERING\(2) PLAN SETS\(3) SHEET SET\ONSITE\C-5.0-EROSION.dwg Date:Jul 21, 2020 - 4:29pm, spotel

Stabilized Construction Entrance/Exit TC-1

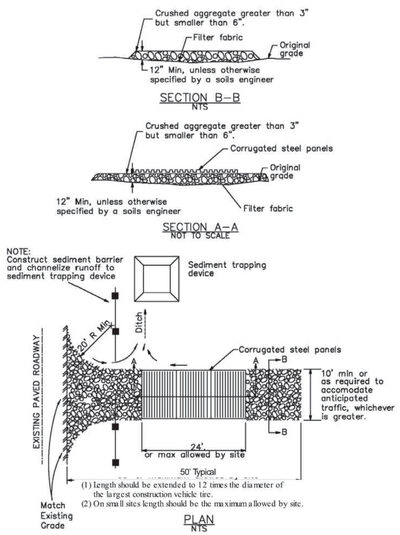

Silt Fence SE-1

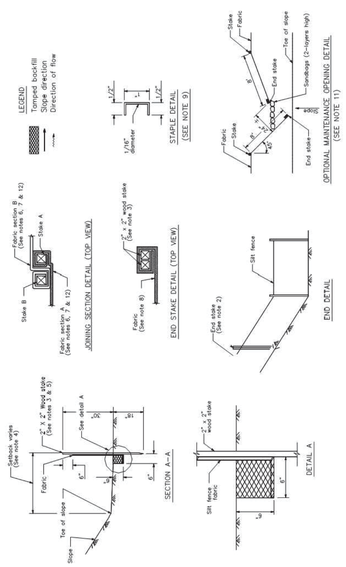

Fiber Rolls SE-5

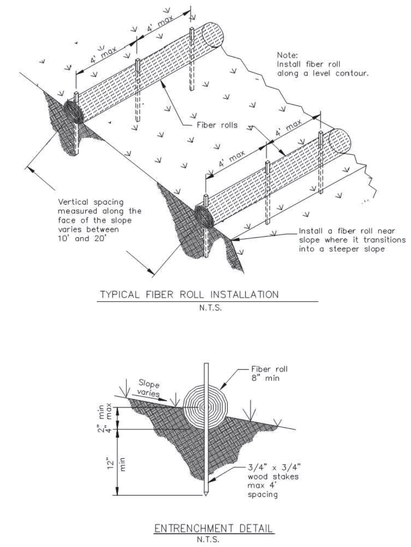

Storm Drain Inlet Protection SE-10

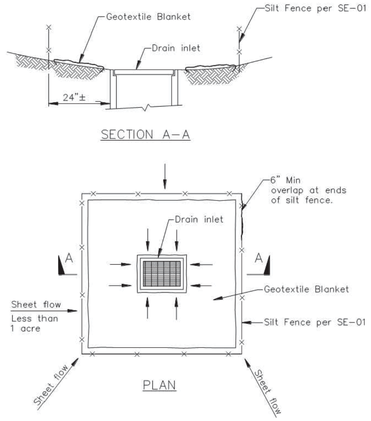

DI PROTECTION TYPE 1
NOT TO SCALE

NOTES:

1. For use in areas where grading has been completed and final soil stabilization and seeding are pending.
2. Not applicable in paved areas.
3. Not applicable with concentrated flows.

Storm Drain Inlet Protection SE-10

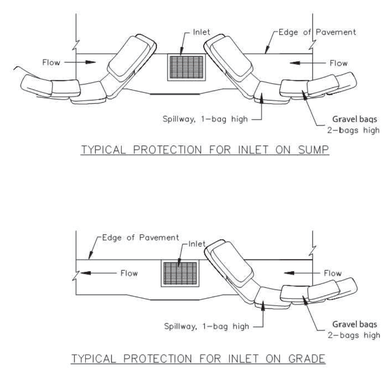

NOTES:

1. Intended for short–term use.
2. Use to inhibit non–storm water flow.
3. Allow for proper maintenance and cleanup.
4. Bags must be removed after adjacent operation is completed
5. Not applicable in areas with high silts and clays without filter fabric.
6. Protection can be effective even if it is not immediately adjacent to the inlet provided that the inlet is protected from potential sources of pollution.

DI PROTECTION TYPE 3
NOT TO SCALE

Cuschieri Horton Architects
1475 S. Bascom Ave, Suite 204
Campbell, California 95008
408.371.8200 Fx 408.371.8201

SANDIS
CIVIL ENGINEERS
SURVEYORS
PLANNERS
1700 S. Winchester Blvd,
Suite 200, Campbell, CA 95008
P. 408.636.0900
F. 408.636.0999
www.sandis.net
SILICON VALLEY TRI-VALLEY CENTRAL VALLEY
SACRAMENTO EAST BAY/ SF

DATE JULY 17, 2020

REGISTERED PROFESSIONAL ENGINEER
CHAD J. BROWNING
No. C68315
Exp. 9/30/21
CIVIL
STATE OF CALIFORNIA

CHAD J. BROWNING
R.C.E. NO. 68315,
EXPIRES 9–30–21

EROSION CONTROL PLAN DETAILS

TOWN OF LOS GATOS
ENGINEERING BUILDING TI ~~AND STORAGE BUILDING~~
41 MILES AVENUE,
LOS GATOS, CA 95030

REVISIONS

NO.	ITEM	DATE

PERMIT #:

SUBMITTAL:
100% SUBMITTAL SET

DRAWN BY: AL
CHECKED BY: SY

JOB NO: 218290
DATE: 07/17/20

SHEET NO.
C-5.1

File: S:\218290\(4) ENGINEERING\(2) PLAN SETS\(3) SHEET SET\ONSITE\C-5.1-EROSION DETAILS.dwg Date:Jul 21, 2020 - 4:29pm, spatel

Pollution Prevention — It's Part of the Plan

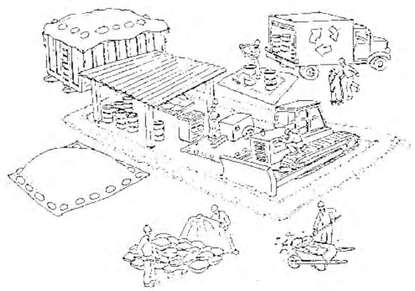

Make sure your crews and subs do the job right!

Runoff from streets and other paved areas is a major source of pollution in San Francisco Bay. Construction activities can directly affect the health of the Bay unless contractors and crews plan ahead to keep dirt, debris, and other construction waste away from storm drains and local creeks. Following these guidelines will ensure your compliance with local ordinance requirements.

Materials storage & spill cleanup

Non-hazardous materials management

- ✔ Sand, dirt, and similar materials must be stored at least 10 feet from catch basins, and covered with a tarp during wet weather or when rain is forecast.
- ✔ Use (but don't overuse) reclaimed water for dust control as needed.
- ✔ Sweep streets and other paved areas daily. Do not wash down streets or work areas with water!
- ✔ Recycle all asphalt, concrete, and aggregate base material from demolition activities.
- ✔ Check dumpsters regularly for leaks and to make sure they don't overflow. Repair or replace leaking dumpsters promptly.

Hazardous materials management

- ✔ Label all hazardous materials and hazardous wastes (such as pesticides, paints, thinners, solvents, fuel, oil, and antifreeze) in accordance with city, state, and federal regulations.
- ✔ Store hazardous materials and wastes in secondary containment and cover them during wet weather.
- ✔ Follow manufacturer's application instructions for hazardous materials and be careful not to use more than necessary. Do not apply chemicals outdoors when rain is forecast within 24 hours.
- ✔ Be sure to arrange for appropriate disposal of all hazardous wastes.

Spill prevention and control

- ✔ Keep a stockpile of spill cleanup materials (rags, absorbents, etc.) available at the construction site at all times.
- ✔ When spills or leaks occur, contain them immediately and be particularly careful to prevent leaks and spills from reaching the gutter, street, or storm drain. Never wash spilled material into a gutter, street, storm drain, or creek!
- ✔ Report any hazardous materials spills immediately! Dial 911 or your local emergency response number.

Vehicle and equipment maintenance & cleaning

- ✔ Inspect vehicles and equipment for leaks frequently. Use drip pans to catch leaks until repairs are made; repair leaks promptly.
- ✔ Fuel and maintain vehicles on site only in a bermed area or over a drip pan that is big enough to prevent runoff.
- ✔ If you must clean vehicles or equipment on site, clean with water only in a bermed area that will not allow rinsewater to run into gutters, streets, storm drains, or creeks.
- ✔ Do not clean vehicles or equipment on-site using soaps, solvents, degreasers, steam cleaning equipment, etc.

Earthwork & contaminated soils

- ✔ Keep excavated soil on the site where it is least likely to collect in the street. Transfer to dump trucks should take place on the site, not in the street.
- ✔ Use hay bales, silt fences, or other control measures to minimize the flow of silt off the site.
- ✔ Avoid scheduling earth moving activities during the rainy season if possible. If grading activities during wet weather are allowed in your permit, be sure to implement all control measures necessary to prevent erosion.
- ✔ Mature vegetation is the best form of erosion control. Minimize disturbance to existing vegetation whenever possible.
- ✔ If you disturb a slope during construction, prevent erosion by securing the soil with erosion control fabric, or seed with fast-growing grasses as soon as possible. Place hay bales down-slope until soil is secure.
- ✔ If you suspect contamination (from site history, discoloration, odor, texture, abandoned underground tanks or pipes, or buried debris), call your local fire department for help in determining what testing should be done.
- ✔ Manage disposal of contaminated soil according to Fire Department instructions.

Dewatering operations

- ✔ Reuse water for dust control, irrigation, or another on-site purpose to the greatest extent possible.
- ✔ Be sure to call your city's storm drain inspector before discharging water to a street, gutter, or storm drain. Filtration or diversion through a basin, tank, or sediment trap may be required.
- ✔ In areas of known contamination, testing is required prior to reuse or discharge of groundwater. Consult with the city inspector to determine what testing to do and to interpret results. Contaminated groundwater must be treated or hauled off-site for proper disposal.

Saw cutting

- ✔ Always completely cover or barricade storm drain inlets when saw cutting. Use filter fabric, hay bales, sand bags, or fine gravel dams to keep slurry out of the storm drain system.
- ✔ Shovel, absorb, or vacuum saw-cut slurry and pick up all waste as soon as you are finished in one location or at the end of each work day (whichever is sooner!).
- ✔ If saw cut slurry enters a catch basin, clean it up immediately.

Paving/asphalt work

- ✔ Do not pave during wet weather or when rain is forecast.
- ✔ Always cover storm drain inlets and manholes when paving or applying seal coat, tack coat, slurry seal, or fog seal.
- ✔ Place drip pans or absorbent material under paving equipment when not in use.
- ✔ Protect gutters, ditches, and drainage courses with hay bales, sand bags, or earthen berms.
- ✔ Do not sweep or wash down excess sand from sand sealing into gutters, storm drains, or creeks. Collect sand and return it to the stockpile, or dispose of it as trash.
- ✔ Do not use water to wash down fresh asphalt concrete pavement.

Concrete, grout, and mortar storage & waste disposal

- ✔ Be sure to store concrete, grout, and mortar under cover and away from drainage areas. These materials must never reach a storm drain.
- ✔ Wash out concrete equipment/trucks off-site or designate an on-site area for washing where water will flow onto dirt or into a temporary pit in a dirt area. Let the water seep into the soil and dispose of hardened concrete with trash.
- ✔ Divert water from washing exposed aggregate concrete to a dirt area where it will not run into a gutter, street, or storm drain.
- ✔ If a suitable dirt area is not available, collect the wash water and remove it for appropriate disposal off site.

Painting

- ✔ Never rinse paint brushes or materials in a gutter or street!
- ✔ Paint out excess water-based paint before rinsing brushes, rollers, or containers in a sink. If you can't use a sink, direct wash water to a dirt area and spade it in.
- ✔ Paint out excess oil-based paint before cleaning brushes in thinner.
- ✔ Filter paint thinners and solvents for reuse whenever possible. Dispose of oil-based paint sludge and unusable thinner as hazardous waste.

Bay Area Stormwater Management Agencies Association (BASMAA)
1-888-BAYWISE

Storm drain polluters may be liable for fines of up to $10,000 per day!

Cuschieri Horton Architects
1475 S. Bascom Ave, Suite 204
Campbell, California 95008
408.371.8200 Fx 408.371.8201

SANDIS
CIVIL ENGINEERS
SURVEYORS
PLANNERS
1700 S. Winchester Blvd.
Suite 200, Campbell, CA 95008
P. 408.636.0900
F. 408.636.0999
www.sandis.net
SILICON VALLEY TRI-VALLEY CENTRAL VALLEY
SACRAMENTO EAST BAY/ SF

DATE JULY 17, 2020

REGISTERED PROFESSIONAL ENGINEER CHAD J. BROWNING No. C68315 Exp. 9/30/21 CIVIL STATE OF CALIFORNIA

CHAD J. BROWNING
R.C.E. NO. 68315,
EXPIRES 9-30-21

CLEAN BAY BLUEPRINT

TOWN OF LOS GATOS
ENGINEERING BUILDING TI ~~AND STORAGE BUILDING~~
41 MILES AVENUE,
LOS GATOS, CA 95030

REVISIONS

NO.	ITEM	DATE

PERMIT #:

SUBMITTAL:
100% SUBMITTAL SET
DRAWN BY: AL
CHECKED BY: SY
JOB NO: 218290
DATE: 07/17/20

SHEET NO.
C-5.2

File: S:\218290\(4) ENGINEERING\(2) PLAN SETS\(3) SHEET SET\ONSITE\C-5.2-BMP.dwg Date:Jul 21, 2020 - 4:29pm, spotel

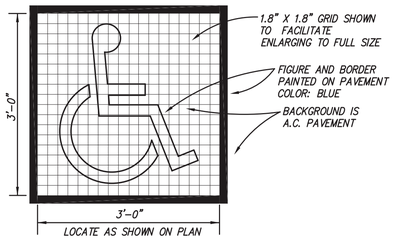

INTERNATIONAL SYMBOL OF ACCESSIBILITY 12

N.T.S.

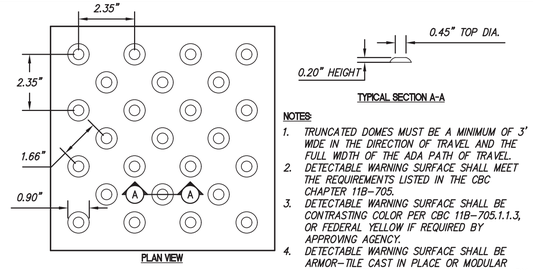

NOTES:

1. TRUNCATED DOMES MUST BE A MINIMUM OF 3' WIDE IN THE DIRECTION OF TRAVEL AND THE FULL WIDTH OF THE ADA PATH OF TRAVEL.
2. DETECTABLE WARNING SURFACE SHALL MEET THE REQUIREMENTS LISTED IN THE CBC CHAPTER 11B-705.
3. DETECTABLE WARNING SURFACE SHALL BE CONTRASTING COLOR PER CBC 11B-705.1.1.3, OR FEDERAL YELLOW IF REQUIRED BY APPROVING AGENCY.
4. DETECTABLE WARNING SURFACE SHALL BE ARMOR-TILE CAST IN PLACE OR MODULAR PAVER UNLESS SUBMITTED AND APPROVED BY ENGINEER.

TRUNCATED DOMES 9

N.T.S.

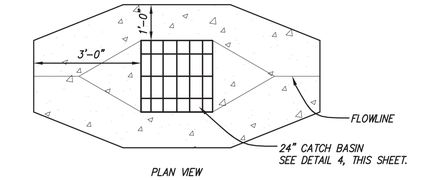

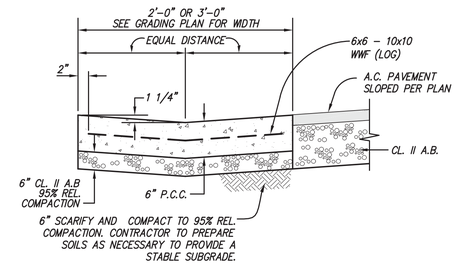

2'/3' VALLEY GUTTER 6

N.T.S.

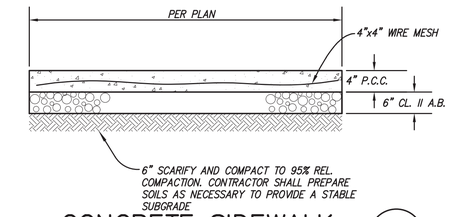

CONCRETE SIDEWALK 1

N.T.S.

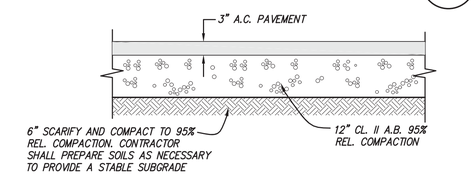

ASPHALT PAVEMENT SECTION 2

N.T.S.

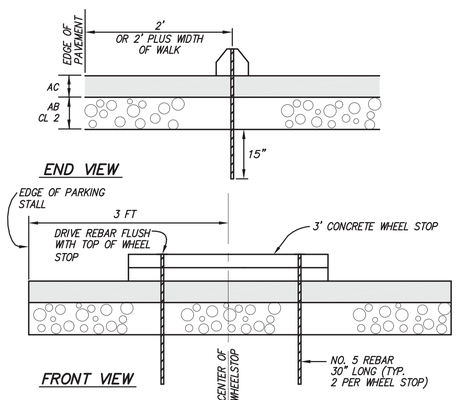

3' WHEEL STOP 13

N.T.S.

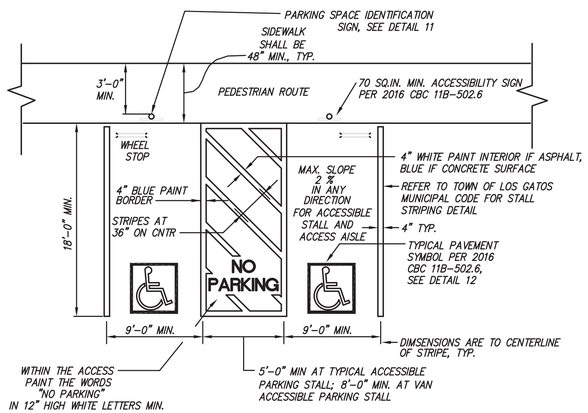

ACCESSIBLE PARKING DETAIL 10

N.T.S.

FRAME AND GRATE REQUIREMENTS		
CATCH BASIN LOCATION	LOADING REQUIREMENTS	MIN. GRATE SPACING REQUIREMENTS
VEHICLE ACCESS ROAD	H20 RATED	4" CROSS BARS O.C. W/ 1 3/16" BEARING BARS O.C.
PEDESTRIAN PATH	LIGHT DUTY/NON-TRAFFIC	1/4" MAX. OPENINGS
LANDSCAPE	LIGHT DUTY/NON-TRAFFIC	4" CROSS BARS O.C. W/ 1 3/16" BEARING BARS O.C.

CATCH BASIN SIZE	A	B	MAX PIPE SIZE
24"	3'-0"	2'-0"	18"

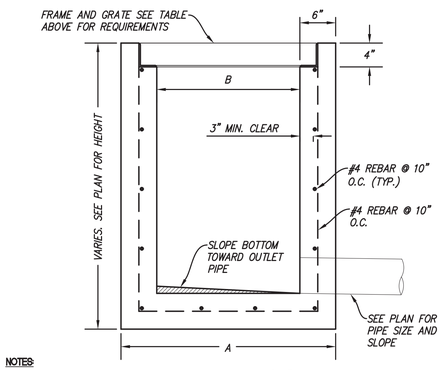

NOTES:

1. T&G JOINT AS REQUIRED FOR STRUCTURES OVER 4'-0" DEEP.
2. FRAME SHALL BE ANCHORED TO CONCRETE PER MANUFACTURER'S SPECIFICATIONS.

CONCRETE SQUARE CATCH BASIN 7

N.T.S.

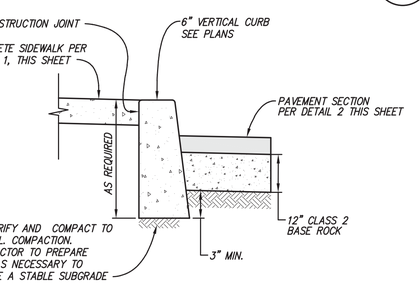

6" VERTICAL CURB, SIDEWALK 3

N.T.S.

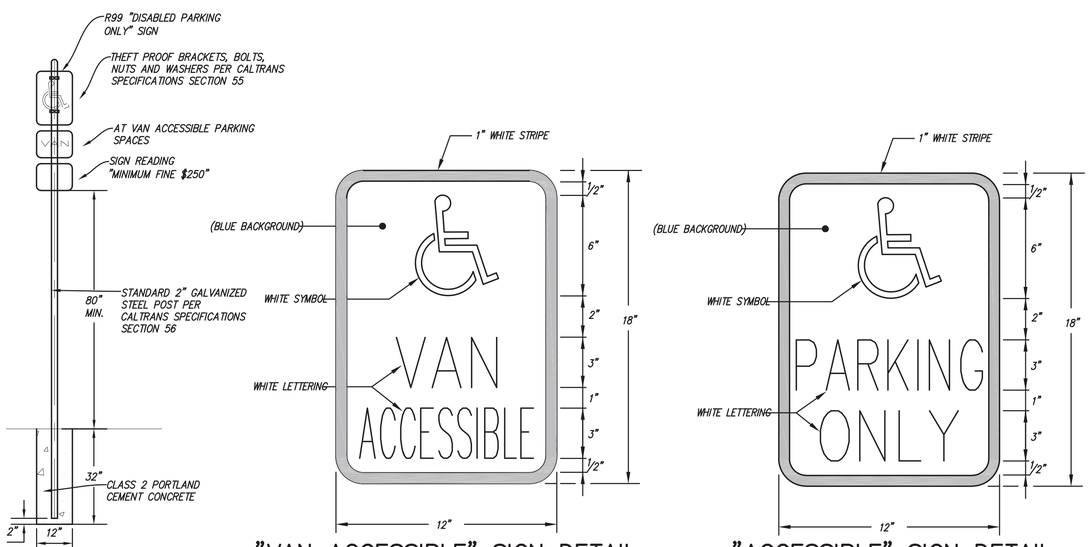

"VAN ACCESSIBLE" SIGN DETAIL

N.T.S.

"ACCESSIBLE" SIGN DETAIL

N.T.S.

TYPICAL PARKING SIGNS 11

N.T.S.

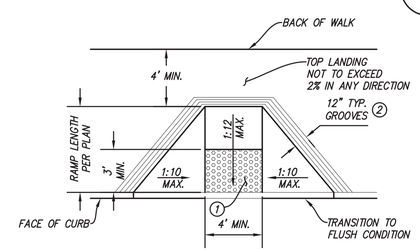

NOTES:

1. DETECTABLE WARNING SURFACE (TRUNCATED DOMES), PER DETAIL 9.
2. GROOVES IF REQUIRED BY LOCAL AUTHORITY

FLARED ACCESSIBLE RAMP 8

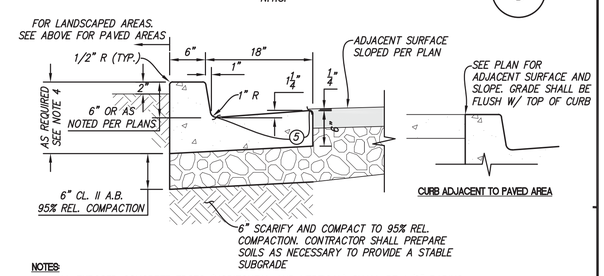

NOTES:

1. ALL EXPOSED CONCRETE EDGES (HORIZONTAL AND VERTICAL) SHALL BE 1/2" RADIUS
2. #4 X 12" SLIP DOWELS AND 1/4" EXPANSION JOINTS TO BE PROVIDED 20' ON CENTER ALONG THE LENGTH OF CURB. MATERIAL FOR EXPANSION JOINTS SHALL CONFORM TO THE REQUIREMENTS OF ASTM DESIGNATION D 1751.
3. REFER TO PLANS AND GEOTECHNICAL REPORT FOR ADJACENT PAVEMENT SECTIONS.
4. TOTAL CURB HEIGHT IS BASED ON CURB HEIGHT PLUS 6". (12" MINIMUM).
5. GUTTER PAN AT ACCESSIBLE STALLS SHALL NOT EXCEED 1.5% SLOPE IN ANY DIRECTION. SEE GRADING PLANS FOR LIP AND FLOW LINE ELEVATIONS.

4"/6" CURB AND GUTTER 4

N.T.S.

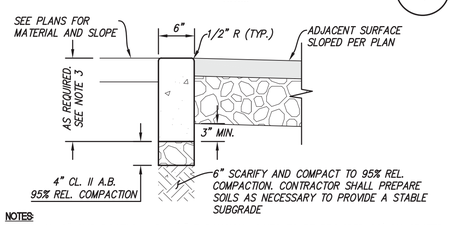

NOTES:

1. #4 X 12" SLIP DOWELS AND 1/4" EXPANSION JOINTS TO BE PROVIDED 20' ON CENTER. MATERIAL FOR EXPANSION JOINTS SHALL CONFORM TO THE REQUIREMENTS OF ASTM DESIGNATION D 1751.
2. REFER TO PLANS AND GEOTECHNICAL REPORT FOR ADJACENT PAVEMENT SECTIONS.
3. TOTAL CURB HEIGHT IS BASED ON ADJACENT PAVEMENT SECTION PLUS 3" BELOW FULL PAVEMENT SECTION (10" MINIMUM).

FLUSH CURB 5

Cuschieri Horton Architects
1475 S. Bascom Ave, Suite 204
Campbell, California 95008
408.371.8200 Fx 408.371.8201

SANDIS
CIVIL ENGINEERS
SURVEYORS
PLANNERS
1700 S. Winchester Blvd, Suite 200, Campbell, CA 95008
P. 408.636.0900
F. 408.636.0999
www.sandis.net
SILICON VALLEY TRI-VALLEY CENTRAL VALLEY SACRAMENTO EAST BAY/ SF

DATE JULY 17, 2020

REGISTERED PROFESSIONAL ENGINEER CHAD J. BROWNING No. C68315 Exp. 9/30/21 CIVIL STATE OF CALIFORNIA

CHAD J. BROWNING
R.C.E. NO. 68315,
EXPIRES 9-30-21

CONSTRUCTION DETAILS

TOWN OF LOS GATOS
ENGINEERING BUILDING TI ~~AND STORAGE BUILDING~~
41 MILES AVENUE,
LOS GATOS, CA 95030

REVISIONS

NO.	ITEM	DATE

PERMIT #:

SUBMITTAL:
100% SUBMITTAL SET
DRAWN BY: AL
CHECKED BY: SY
JOB NO: 218290
DATE: 07/17/20

SHEET NO.
C-6.0

File: S:\218290\(4) ENGINEERING\(2) PLAN SETS\(3) SHEET SET\ONSITE\C-6.0-DETAILS.dwg Date: Jul 21, 2020 - 4:29pm, spotel

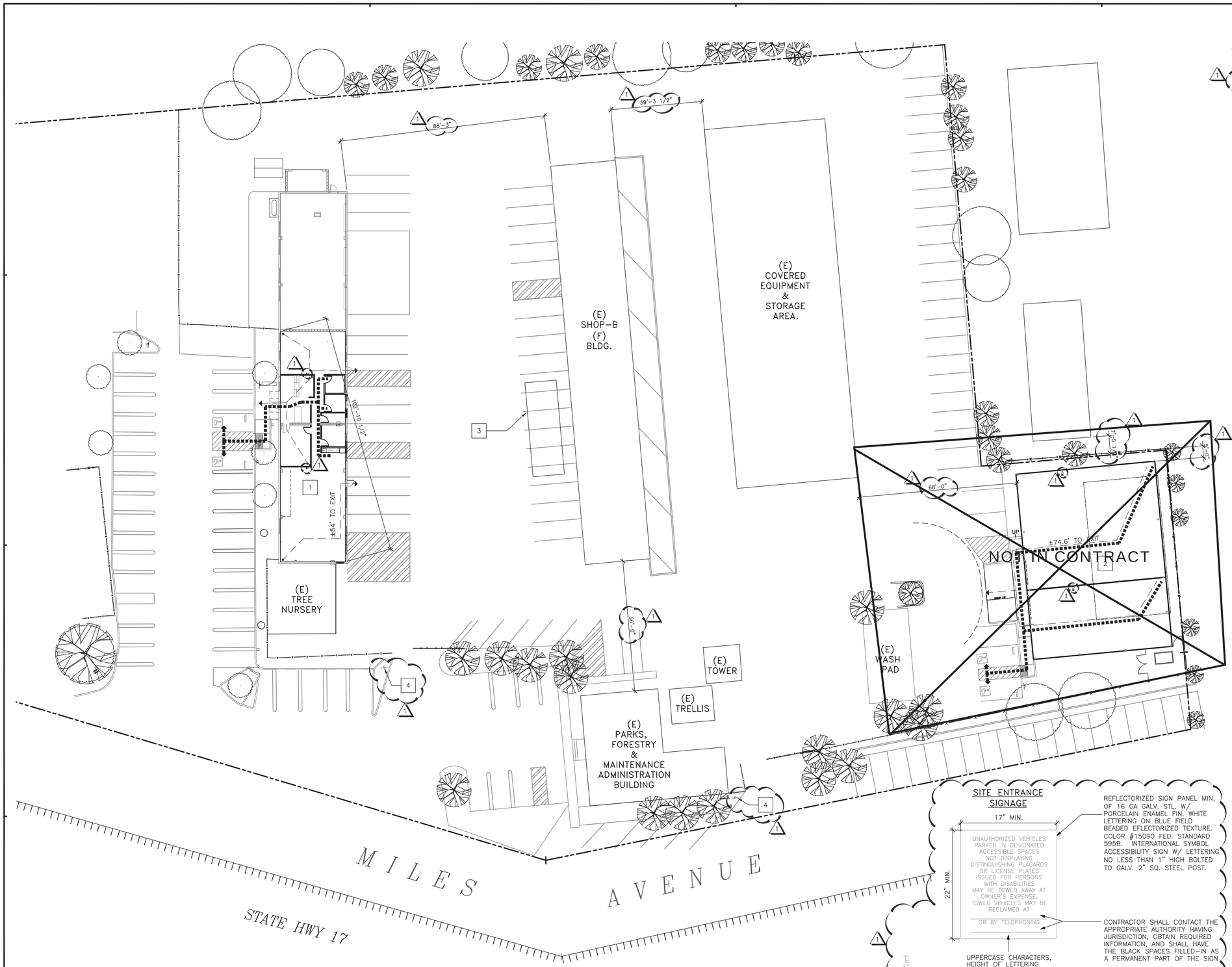

1 EGRESS AND ACCESSIBILITY
OVERALL SITE & BUILDING

1"=20'-0 0 10' 20' 40'

NORTH

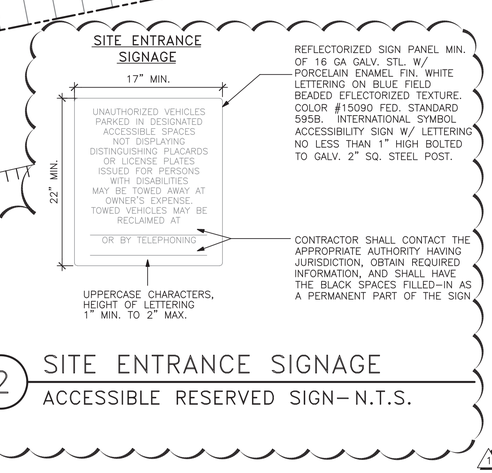

2 SITE ENTRANCE SIGNAGE
ACCESSIBLE RESERVED SIGN- N.T.S.

SPECIFIC NOTES

1. (E) ENGINEERING BUILDING.
2. ~~(N) STEEL STORAGE BUILDING.~~
3. (E) TEMPORARY TRAILER BUILDING.
4. ACCESSIBLE RESERVED SIGN, SEE DETAIL 2/-

OCCUPANT LOAD

CBC TABLE 1004.1.2

B - BUSINESS

NAME OF SPACE	FUNCTION OF SPACE	SQ.FT.	LOAD FACTOR	OCC.
GENERAL OFFICE	B	2416.12	100 GROSS	25
CONFERENCE ROOM	A	221.51	15 NET	15
			OCCUPANTS TOTAL =	40

~~S - STORAGE~~

~~FUNCTION OF SPACE~~	~~SQ.FT.~~	~~LOAD FACTOR~~	~~OCC.~~
~~CONDITIONED SPACE~~	~~1765~~	~~500 GROSS~~	~~4~~
~~UNCONDITIONED SPACE~~	~~2968~~	~~500 GROSS~~	~~6~~
		~~OCCUPANTS TOTAL =~~	~~10~~

EXITS

B OCCUPANCY TOTAL OCCUPANTS = 40
REQ'D EXITS = 1
EXITS PROVIDED = 1
(E) EXITS = 2

MIN. CLEAR EXIT WIDTH REQ'D = 32"
CLEAR EXIT WIDTH PROVIDED = 34"
(E) CLEAR WIDTH PROVIDED = (34" + 34") = 68"
= TOTAL CLEAR WIDTH PROVIDED = 34" + 68" = 102"

~~S OCCUPANCY TOTAL OCCUPANTS = 10~~
~~REQ'D EXITS = 1~~
~~EXITS PROVIDED = 1~~

~~MIN. CLEAR EXIT WIDTH REQ'D = 32"~~
~~CLEAR EXIT WIDTH PROVIDED = 34" + 34" = 68"~~

TRAVEL DISTANCE

PER CBC TABLE 1017.2 AND 1006.2.1

'B' OCCUPANCY - MAXIMUM TRAVEL DISTANCE
200' - ALLOWED, NON-SPRINKLERED
54' - MAXIMUM PROPOSED

~~'S' OCCUPANCY - MAXIMUM TRAVEL DISTANCE~~
~~250' - ALLOWED, NON SPRINKLERED~~
~~74.6' - MAXIMUM PROPOSED~~

GENERAL NOTES

A. SEE SHEET A0.01 FOR WALL TYPE LEGEND

B. SEE SHEET A0.00 FOR TYP. DOOR CLEARANCE DETAILS AND GRAPHIC SYMBOL INFORMATION

C. ALL EXIT SIGNS SHALL BE INSTALLED AT THE CENTERLINE OF CORRIDORS, HALLWAYS, OR AISLES AND BE CENTERED ABOVE DOORS OR OPENINGS, U.N.O. GRAPHIC SYMBOLS MAY NOT APPEAR CENTERED FOR CLARITY.

D. CHANGES IN LEVEL IN THE ACCESSIBLE ROUTE OF 1/4" HIGH MAX. SHALL BE PERMITTED TO BE VERTICAL AND WITHOUT EDGE TREATMENT. CHANGES IN LEVEL BETWEEN 1/4" HIGH MIN. AND 1/2" HIGH MAX. SHALL BE BEVELED WITH A SLOPE NOT STEEPER THAN 1:2.

E. THRESHOLDS AT DOORWAYS SHALL BE 1/2" HIGH MAX.

F. DOORS WITH CLOSERS ON THE ACCESSIBLE ROUTE SHALL BE ADJUSTED SO THAT FROM AN OPEN POSITION OF 90 DEGREES, THE TIME REQUIRED TO MOVE THE DOOR TO A POSITION OF 12 DEGREES FROM THE LATCH IS 5 SECONDS.

G. THE FORCE REQUIRED TO OPEN DOORS, OTHER THAN FIRE DOORS, SHALL NOT EXCEED 5 LBS. THE FORCE REQUIRED TO OPEN FIRE DOORS SHALL BE 15 LBS. MAX. AS ALLOWED BY THE AUTHORITY HAVING JURISDICTION.

H. ALL OPERABLE PARTS OF DOOR HARDWARE ON ACCESSIBLE ROUTE SHALL BE LOCATED 34" MIN. AND 44" MAX. ABOVE FINISH FLOOR AND SHALL NOT REQUIRE TIGHT GRASPING, PINCHING, OR TWISTING OF THE WRIST.

I. MAINTAIN 36" MIN. CLR. FOR MEANS OF EGRESS BETWEEN ANY FIXTURE U.N.O.

LEGEND

- PATH OF EGRESS
- ACCESSIBLE PATH OF TRAVEL
- START OF PATH OF TRAVEL
- EGRESS EXIT AT GRADE
- PARCEL BOUNDARY LINES
- LOT BOUNDARY LINES
- (E) FREEWAY FENCE
- PROJECT PROPERTY LINES
- (E) TREES. TYP.
- (E) TREES. TYP.
- (E) CHAIN LINK FENCE
- FIRE EXTINGUISHER CABINET / FIRE EXTINGUISHER

Cuschieri Horton Architects
1475 S. Bascom Ave. Suite 204
Campbell, California 95008
408.371.8200 Fx 408.371.8201

LICENSED ARCHITECT
RAY BRUCE HORTON
C-34957
JAN 31 2021
RENEWAL DATE
STATE OF CALIFORNIA

EGRESS & ACCESSIBILITY
OVERALL SITE & BUILDING

TOWN OF LOS GATOS
ENGINEERING BUILDING TI ~~AND STORAGE~~ BUILDING
41 MILES AVENUE,
LOS GATOS, CA 95030

REVISIONS

NO.	ITEM	DATE
1	RESPONSE TO FIRST REVIEW COMMENTS	07/17/20

PERMIT #:

SUBMITTAL:
CITY SUBMITTAL SET

DRAWN BY: SG
CHECKED BY: RB
JOB NO: 1826
DATE: 12/04/19

SHEET NO.
A0.02

8/11/2020 8:37 AM

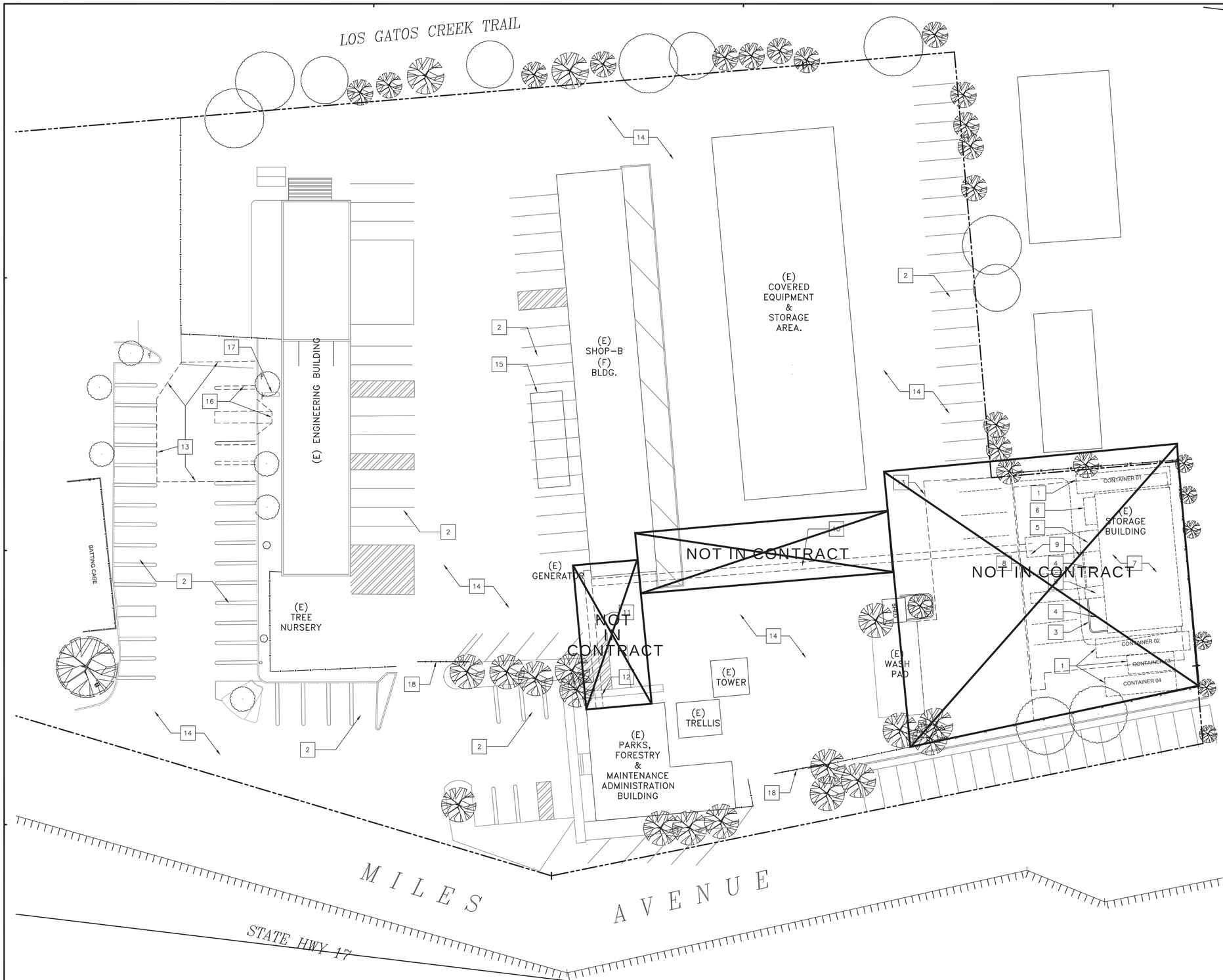

SPECIFIC NOTES

1. ~~(E) STORAGE CONTAINER TO BE REMOVED, COORDINATE WITH OWNER.~~
2. (E) PARKING STALLS, TYP.
3. ~~DEMOLISH (E) CONCRETE CURB.~~
4. ~~REMOVE (E) PLANTS/HEDGES.~~
5. ~~DEMOLISH (E) CONCRETE RAMP.~~
6. ~~DEMOLISH (E) CHAINLINK GATE, SLAT, AND FENCE.~~
7. ~~DEMOLISH (E) BUILDING AND ASSOCIATED ELECTRICAL, MECHANICAL, AND PLUMBING FITTINGS/FIXTURES.~~
8. ~~REMOVE (E) PAINTED PARKING STALLS AND (E) WHEEL STOPS.~~
9. ~~PORTION OF (E) ASPHALT PAVEMENT TO BE DEMOLISHED TO GIVE WAY FOR A STEEL BUILDING. SEE CIVIL AND EMPIRE STEEL BUILDING DRAWINGS FOR MORE INFORMATION.~~
10. ~~DEMOLISH & REMOVE AC PAVING, TRENCH FOR (4) 2" UNDERGROUND CONDUITS. SEE ELECTRICAL & CIVIL DRAWINGS FOR MORE INFORMATION.~~
11. ~~DEMOLISH & REMOVE AC PAVING AND ANY ASSOCIATED BEDROCK, TRENCH FOR (3) 2" UNDERGROUND CONDUITS. SEE ELECTRICAL & CIVIL DRAWINGS FOR MORE INFORMATION.~~
12. ~~DEMOLISH (E) CONCRETE WALKWAY TO GIVE WAY FOR TRENCHING.~~
13. DEMOLISH & REMOVE AC PAVING AND ANY ASSOCIATED BEDROCK. SEE CIVIL DRAWINGS FOR MORE INFO.
14. (E) AC PAVING.
15. (E) TEMPORARY TRAILER.
16. REMOVE (E) DISABLED PARKING SIGNS & POST
17. (E) BENCH TO REMAIN
18. (E) CHAINLINK GATE

GENERAL NOTES

A. REFER TO STRUCTURAL, MECHANICAL, PLUMBING AND ELECTRICAL DRAWINGS FOR ADDITIONAL DEMOLITION WORK.

B. CONTRACTOR SHALL INSPECT WALLS & SLABS TO IDENTIFY NON-COMPLIANT PENETRATIONS. PROVIDE COMPLIANT CONSTRUCTION AT ALL NEW AND (E) PENETRATIONS. DRAWINGS LOCATE CONDITIONS VISIBLE AT TIME OF DOCUMENT PREPARATION ONLY. CONTRACTOR IS TO VERIFY ACTUAL CONDITIONS AT START OF CONSTRUCTION.

C. ROUTES OF EGRESS TO BE MAINTAINED CLEAR AT ALL TIMES.

D. ALL CONCRETE SAWCUTTING WORK SHALL BE COORDINATED WITH THE PLUMBING DRAWINGS.

E. PROVIDE STICKY MATS AT PROJECT ENTRANCE DOORS TO PREVENT MIGRATION OF DIRT/DEBRIS OUTSIDE OF PROJECT AREA.

F. PRIOR TO THE DEMOLITION OF EACH CONDUIT AND CABLING RUN, THE CONTRACTOR SHALL CONFIRM THE IDENTITY OF EACH EXISTING CONDUIT AND CABLING RUN THAT ENTERS INTO, TERMINATES OR PASSES THROUGH THE AREA OF DEMOLITION.

G. RESTORE FINISHES DAMAGED DURING INSTALLATION AND CONSTRUCTION PERIOD SO NO EVIDENCE REMAINS OF CORRECTION WORK.

H. OWNER TO COVER AND PROTECT (E) EQUIPMENT TO REMAIN IN PLACE DURING CONSTRUCTION. CONTRACTOR TO PROTECT EQUIPMENT FROM ANY AND ALL DAMAGE DURING CONSTRUCTION.

I. CONTRACTOR SHALL INVESTIGATE EXISTING CONDITIONS IMMEDIATELY BELOW, ABOVE & ADJACENT TO PROJECT AREA TO VERIFY EXISTING SYSTEMS AFFECTED BY NEW CONSTRUCTION.

J. TEMPORARILY MOVE ANY (E) SYSTEMS (M, P & E) THAT OBSTRUCT NEW CONSTRUCTION WORK.

K. PATCH AND REPAIR CEILINGS AND WALLS TO MATCH EXISTING CONDITIONS AND SURFACE FINISHES.

LEGEND

- PARCEL BOUNDARY LINES
- LOT BOUNDARY LINES
- (E) FREEWAY FENCE
- PROJECT PROPERTY LINES
- (E) TREES. TYP.
- (E) TREES. TYP.
- (E) CHAIN LINK FENCE

KEYPLAN

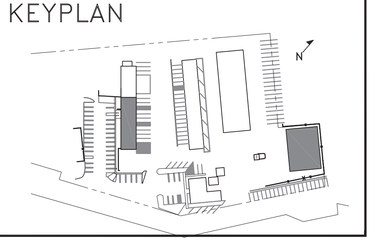

1 DEMOLITION SITE PLAN
OVERALL SITE

1"=20'-0 0 10' 20' 40' NORTH

Cuschieri Horton Architects
1475 S. Bascom Ave. Suite 204
Campbell, California 95008
408.371.8200 Fx 408.371.8201

LICENSED ARCHITECT — JOSEPH ANTHONY CUSCHIERI — C-34957 — JAN 31 2021 — RENEWAL DATE — STATE OF CALIFORNIA

DEMOLITION SITE PLAN – OVERALL SITE

TOWN OF LOS GATOS
ENGINEERING BUILDING TI ~~AND STORAGE~~ BUILDING
41 MILES AVENUE,
LOS GATOS, CA 95030

REVISIONS

NO.	ITEM	DATE

PERMIT #:

SUBMITTAL:
CITY SUBMITTAL SET

DRAWN BY: SG
CHECKED BY: RB
JOB NO: 1826
DATE: 12/04/19

SHEET NO.
A0.03

8/11/2020 8:43 AM

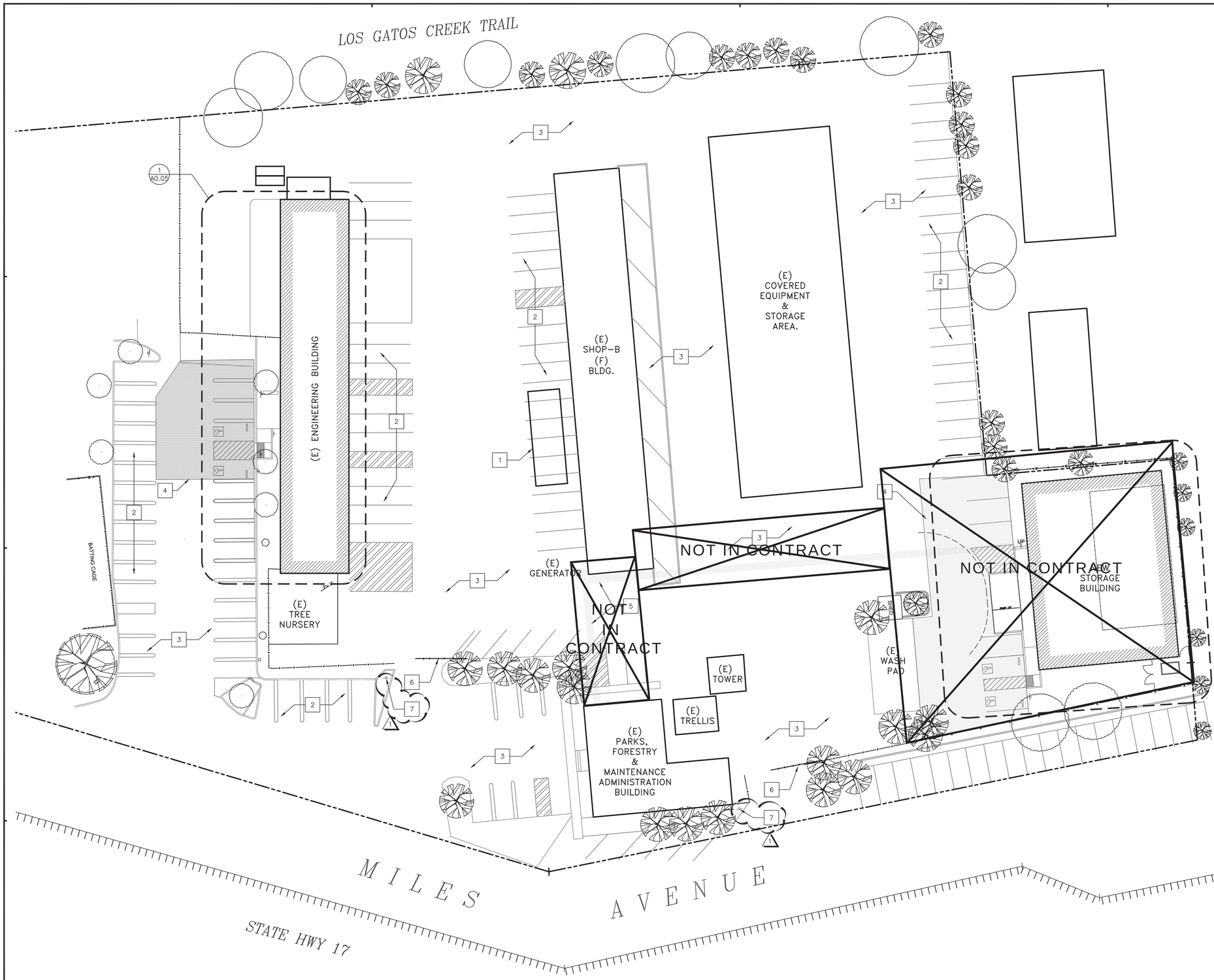

1 SITE PLAN
OVERALL SITE

1"=20'-0

0 10' 20' 40'

NORTH

SPECIFIC NOTES

1. (E) TEMPORARY TRAILER.
2. (E) PARKING STALLS.
3. (E) AC PAVING.
4. AC PAVING. SEE CIVIL DRAWINGS FOR MORE INFORMATION.
5. FILL, PATCH AND REPAIR UTILITY TRENCH AC PAVING. SEE CIVIL DRAWINGS FOR MORE INFORMATION.
6. (E) CHAINLINK GATE
7. ACCESSIBLE RESERVED SIGN, SEE DETAIL 2/A0.02

GENERAL NOTES

A. SEE SHEET A0.01 FOR WALL TYPE LEGEND

B. SEE SHEET A0.00 FOR TYP. DOOR CLEARANCE DETAILS AND GRAPHIC SYMBOL INFORMATION

C. ALL EXIT SIGNS SHALL BE INSTALLED AT THE CENTERLINE OF CORRIDORS, HALLWAYS, OR AISLES AND BE CENTERED ABOVE DOORS OR OPENINGS, U.N.O. GRAPHIC SYMBOLS MAY NOT APPEAR CENTERED FOR CLARITY.

D. CHANGES IN LEVEL IN THE ACCESSIBLE ROUTE OF 1/4" HIGH MAX. SHALL BE PERMITTED TO BE VERTICAL AND WITHOUT EDGE TREATMENT. CHANGES IN LEVEL BETWEEN 1/4" HIGH MIN. AND 1/2" HIGH MAX. SHALL BE BEVELED WITH A SLOPE NOT STEEPER THAN 1:2.

E. THRESHOLDS AT DOORWAYS SHALL BE 1/2" HIGH MAX.

F. DOORS WITH CLOSERS ON THE ACCESSIBLE ROUTE SHALL BE ADJUSTED SO THAT FROM AN OPEN POSITION OF 90 DEGREES, THE TIME REQUIRED TO MOVE THE DOOR TO A POSITION OF 12 DEGREES FROM THE LATCH IS 5 SECONDS.

G. THE FORCE REQUIRED TO OPEN DOORS, OTHER THAN FIRE DOORS, SHALL NOT EXCEED 5 LBS. THE FORCE REQUIRED TO OPEN FIRE DOORS SHALL BE 15 LBS. MAX. AS ALLOWED BY THE AUTHORITY HAVING JURISDICTION.

H. DOOR SURFACES WITHIN 10 INCHES OF THE FINISH FLOOR MEASURED VERTICALLY SHALL HAVE A SMOOTH SURFACE ON THE PUSH SIDE EXTENDING THE FULL WIDTH OF THE DOOR. PARTS CREATING HORIZONTAL OR VERTICAL JOINTS IN THESE SURFACES SHALL BE WITHIN 1/16" OF THE SAME PLANE AS THE OTHER AND BE FREE OF SHARP OR ABRASIVE EDGES. CAVITIES CREATED BY ADDED KICK PLATES SHALL BE CAPPED.

I. ALL OPERABLE PARTS OF DOOR HARDWARE ON ACCESSIBLE ROUTE SHALL BE LOCATED 34" MIN. AND 44" MAX. ABOVE FINISH FLOOR AND SHALL NOT REQUIRE TIGHT GRASPING, PINCHING, OR TWISTING OF THE WRIST.

J. SEE SHEET A0.02 FOR EGRESS AND ACCESSIBILITY WITHIN PROJECT AREA

LEGEND

- PARCEL BOUNDARY LINES
- LOT BOUNDARY LINES
- (E) FREEWAY FENCE
- PROJECT PROPERTY LINES
- (E) TREES. TYP.
- (E) TREES. TYP.
- (E) CHAIN LINK FENCE

KEYPLAN

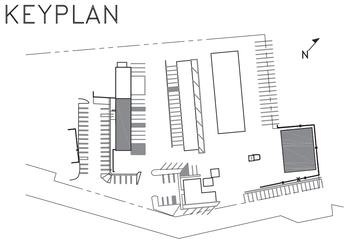

Cuschieri Horton Architects
1475 S. Bascom Ave. Suite 204
Campbell, California 95008
408.371.8200 Fx 408.371.8201

LICENSED ARCHITECT
C-34957
JAN 31 2021
RENEWAL DATE
STATE OF CALIFORNIA

SITE PLAN – OVERALL SITE

TOWN OF LOS GATOS
ENGINEERING BUILDING TI AND STORAGE BUILDING
41 MILES AVENUE,
LOS GATOS, CA 95030

REVISIONS

NO.	ITEM	DATE
1	RESPONSE TO FIRST REVIEW COMMENTS	07/17/20

PERMIT #:

SUBMITTAL:
CITY SUBMITTAL SET

DRAWN BY: DN
CHECKED BY: RB
JOB NO: 1826
DATE: 12/04/19

SHEET NO.
A0.04

8/11/2020 9:33 AM

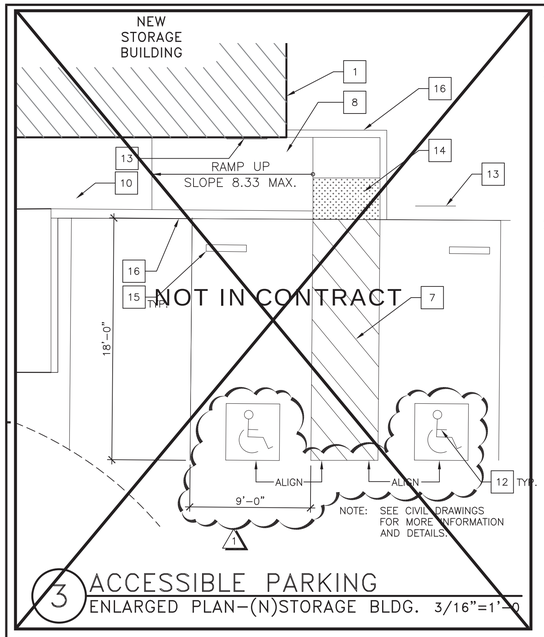

3 ACCESSIBLE PARKING
ENLARGED PLAN–(N)STORAGE BLDG. 3/16"=1'-0

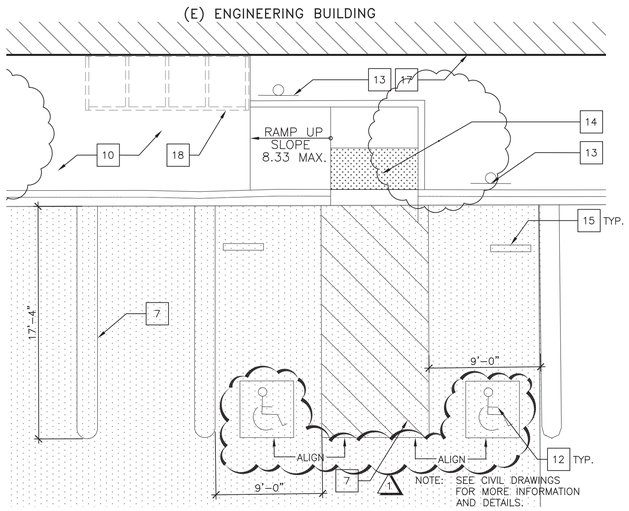

4 ACCESSIBLE PARKING
ENLARGED PLAN – ENG. BLDG. 3/16"=1'-0

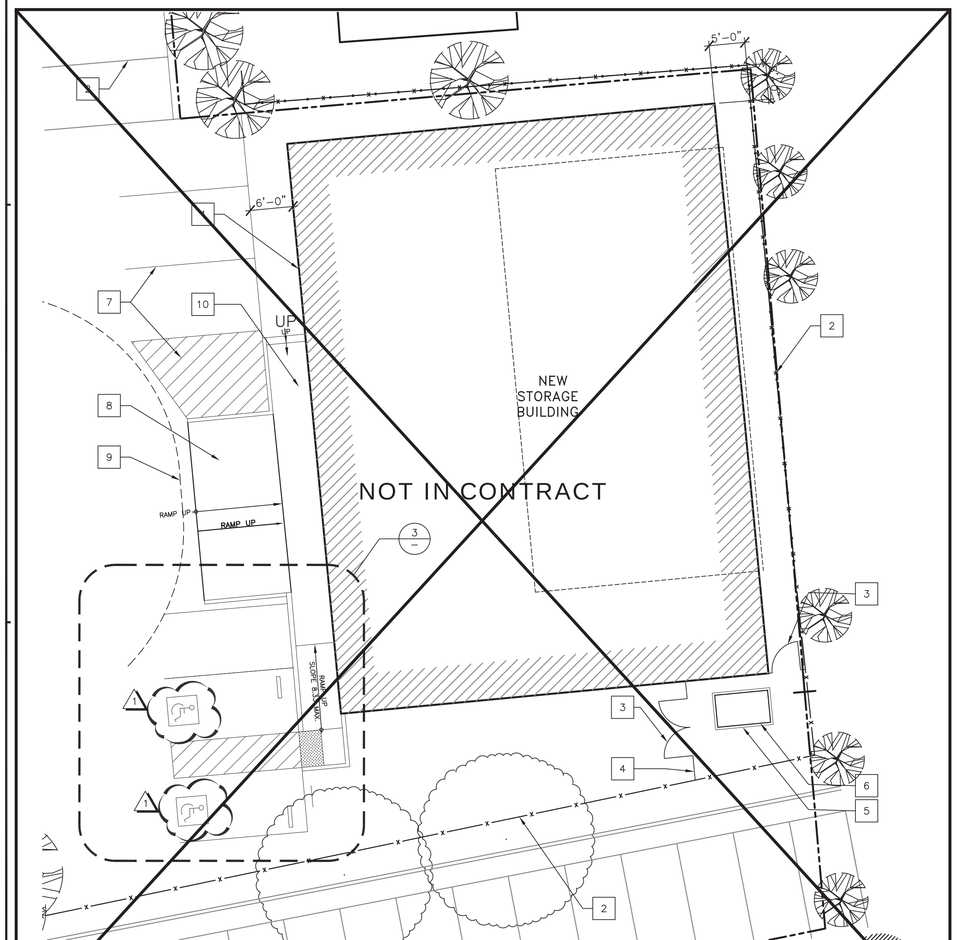

2 PARTIAL SITE PLAN
NEW STORAGE BUILDING
1"=10'-0 0 10' 20'
NORTH

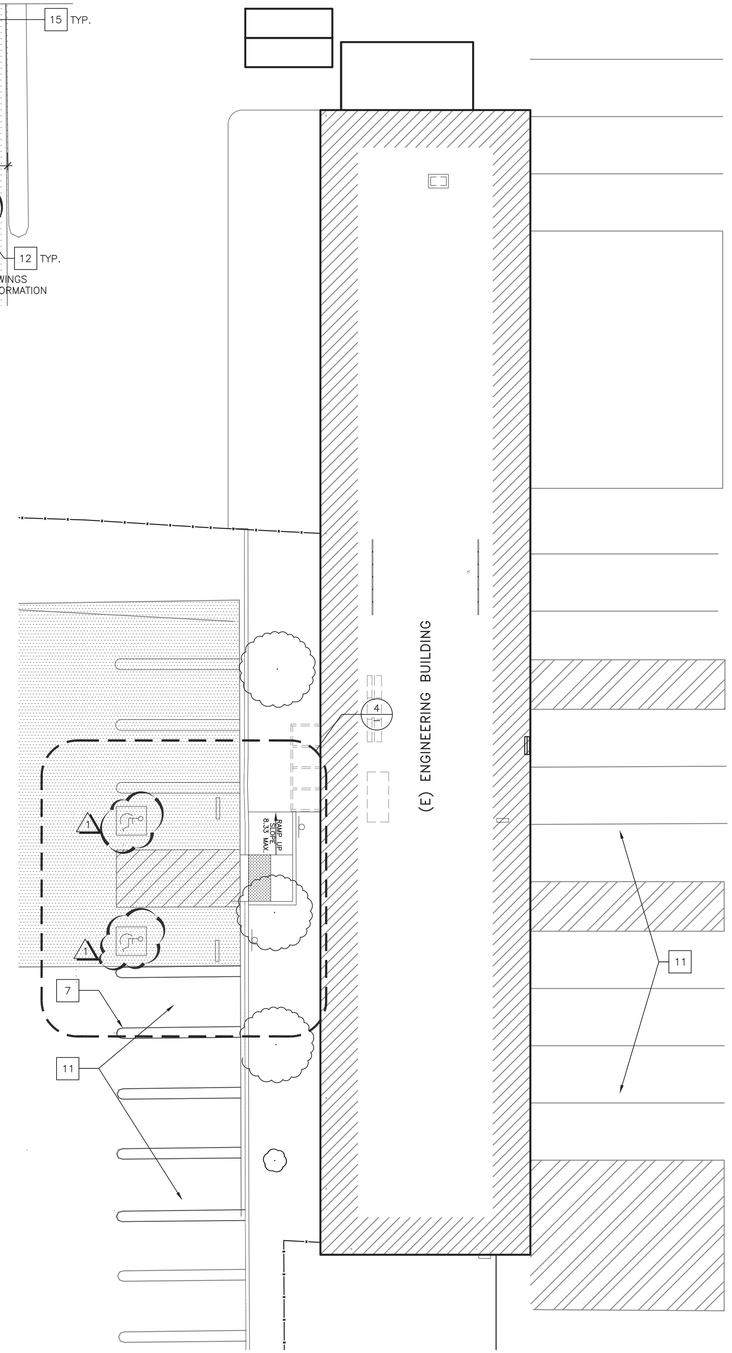

1 PARTIAL SITE PLAN
ENGINEERING BUILDING
1"=10'-0 0 10' 20'
NORTH

SPECIFIC NOTES

1. ~~NEW STORAGE STEEL BUILDING. SEE SHEET A2.1 AND EMPIRE STEEL BUILDING DRAWINGS FOR MORE INFORMATION.~~
2. (E) FENCE TO REMAIN.
3. ~~CHAIN LINK GATE. SEE DET. 11/A3.2~~
4. ~~CHAIN LINK FENCE WITH VINYL SLATS. SEE DET. 11/A3.2~~
5. ~~CONCRETE/HOUSEKEEPING PAD. SEE STRUCTURAL DRAWINGS FOR MORE INFORMATION.~~
6. ~~HVAC UNIT. SEE MECHANICAL DRAWINGS FOR MORE INFORMATION.~~
7. PAINTED PARKING STRIPING.
8. ~~CONCRETE RAMP.~~
9. ~~LINE OF VEHICLE TURN AROUND CLEARANCE.~~
10. CONCRETE WALK
11. (E) PARKING STALLS.
12. PAINTED INTERNATIONAL SYMBOL OF ACCESSIBILITY PAVEMENT SIGN. SEE CIVIL DRAWINGS FOR MORE INFORMATION.
13. ADA PARKING SPACE IDENTIFICATION SIGN. SEE CIVIL DRAWINGS FOR MORE INFORMATION.
14. TRUNCATED DOME DETECTABLE WARNING SURFACE. SEE CIVIL DRAWINGS FOR MORE INFORMATION.
15. WHEEL STOP.
16. ~~CONCRETE CURB. SEE CIVIL DRAWINGS FOR MORE INFORMATION.~~
17. (E) ENGINEERING BUILDING
18. (N) ENTRANCE CANOPY ABOVE. SEE DETAILS ON SHEET A9.0

GENERAL NOTES

A. SEE SHEET A0.01 FOR WALL TYPE LEGEND

B. SEE SHEET A0.00 FOR TYP. DOOR CLEARANCE DETAILS AND GRAPHIC SYMBOL INFORMATION

C. ALL EXIT SIGNS SHALL BE INSTALLED AT THE CENTERLINE OF CORRIDORS, HALLWAYS, OR AISLES AND BE CENTERED ABOVE DOORS OR OPENINGS, U.N.O. GRAPHIC SYMBOLS MAY NOT APPEAR CENTERED FOR CLARITY.

D. CHANGES IN LEVEL IN THE ACCESSIBLE ROUTE OF 1/4" HIGH MAX. SHALL BE PERMITTED TO BE VERTICAL AND WITHOUT EDGE TREATMENT. CHANGES IN LEVEL BETWEEN 1/4" HIGH MIN. AND 1/2" HIGH MAX. SHALL BE BEVELED WITH A SLOPE NOT STEEPER THAN 1:2.

E. THRESHOLDS AT DOORWAYS SHALL BE 1/2" HIGH MAX.

F. DOORS WITH CLOSERS ON THE ACCESSIBLE ROUTE SHALL BE ADJUSTED SO THAT FROM AN OPEN POSITION OF 90 DEGREES, THE TIME REQUIRED TO MOVE THE DOOR TO A POSITION OF 12 DEGREES FROM THE LATCH IS 5 SECONDS.

G. THE FORCE REQUIRED TO OPEN DOORS, OTHER THAN FIRE DOORS, SHALL NOT EXCEED 5 LBS. THE FORCE REQUIRED TO OPEN FIRE DOORS SHALL BE 15 LBS. MAX. AS ALLOWED BY THE AUTHORITY HAVING JURISDICTION.

H. DOOR SURFACES WITHIN 10 INCHES OF THE FINISH FLOOR MEASURED VERTICALLY SHALL HAVE A SMOOTH SURFACE ON THE PUSH SIDE EXTENDING THE FULL WIDTH OF THE DOOR. PARTS CREATING HORIZONTAL OR VERTICAL JOINTS IN THESE SURFACES SHALL BE WITHIN 1/16" OF THE SAME PLANE AS THE OTHER AND BE FREE OF SHARP OR ABRASIVE EDGES. CAVITIES CREATED BY ADDED KICK PLATES SHALL BE CAPPED.

I. ALL OPERABLE PARTS OF DOOR HARDWARE ON ACCESSIBLE ROUTE SHALL BE LOCATED 34" MIN. AND 44" MAX. ABOVE FINISH FLOOR AND SHALL NOT REQUIRE TIGHT GRASPING, PINCHING, OR TWISTING OF THE WRIST.

J. (E) SITE PARKING SHARED WITH ADJACENT (E) BUILDING TENANTS.

K. SEE SHEET A0.02 FOR EGRESS AND ACCESSIBILITY WITHIN PROJECT AREA

LEGEND

PARCEL BOUNDARY LINES
LOT BOUNDARY LINES
(E) FREEWAY FENCE
PROJECT PROPERTY LINES
(E) TREES. TYP.
(E) TREES. TYP.
(E) CHAIN LINK FENCE

KEYPLAN

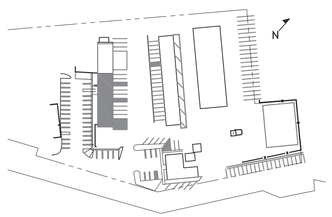

Cuschieri Horton Architects
1475 S. Bascom Ave. Suite 204
Campbell, California 95008
408.371.8200 Fx 408.371.8201

LICENSED ARCHITECT
RICHARD BRUTSCH BOHNER
C-34957
JAN 31 2021
RENEWAL DATE
STATE OF CALIFORNIA

PARTIAL SITE PLANS – ENGINEERING & STORAGE BUILDING

TOWN OF LOS GATOS
ENGINEERING BUILDING TI ~~AND STORAGE BUILDING~~
41 MILES AVENUE,
LOS GATOS, CA 95030

REVISIONS

NO.	ITEM	DATE
1	RESPONSE TO FIRST REVIEW COMMENTS	07/17/20

PERMIT #:

SUBMITTAL:
CITY SUBMITTAL SET

DRAWN BY: SG
CHECKED BY: RB
JOB NO: 1826
DATE: 12/04/19

SHEET NO.
A0.05

8/11/2020 9:17 AM

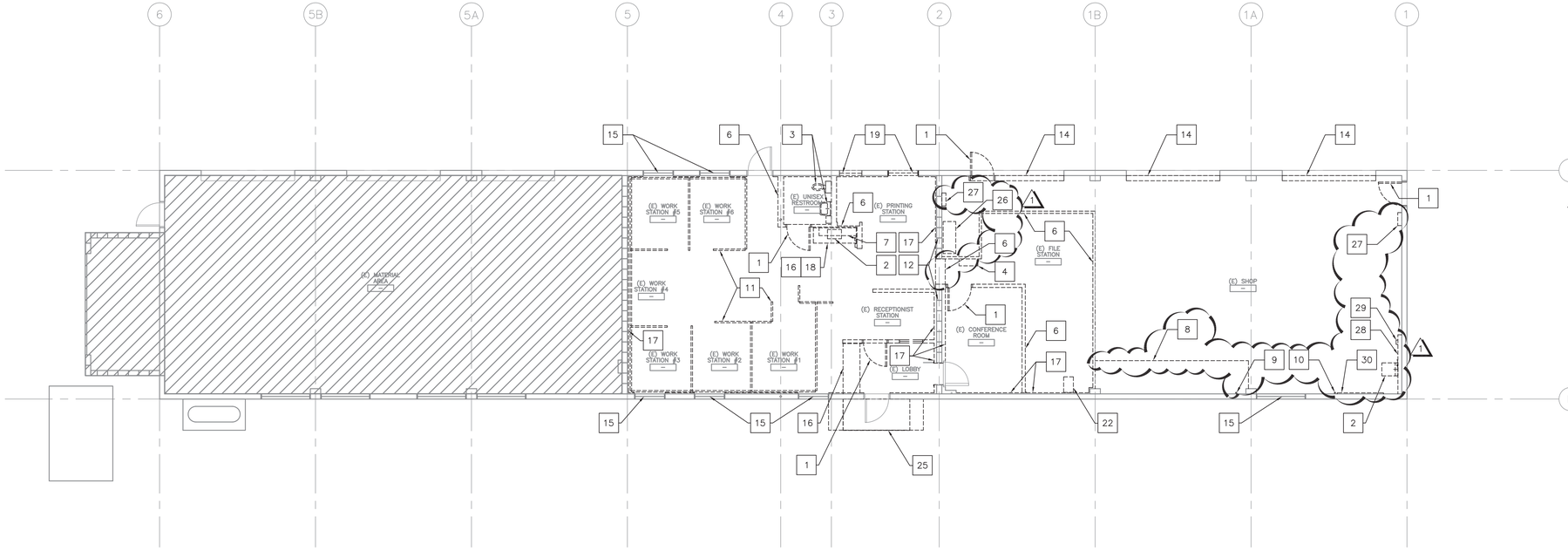

1 DEMOLITION FLOOR PLAN
ENGINEERING BUILDING

1/8"=1'-0" 0 2' 4' 8' 16'

NORTH

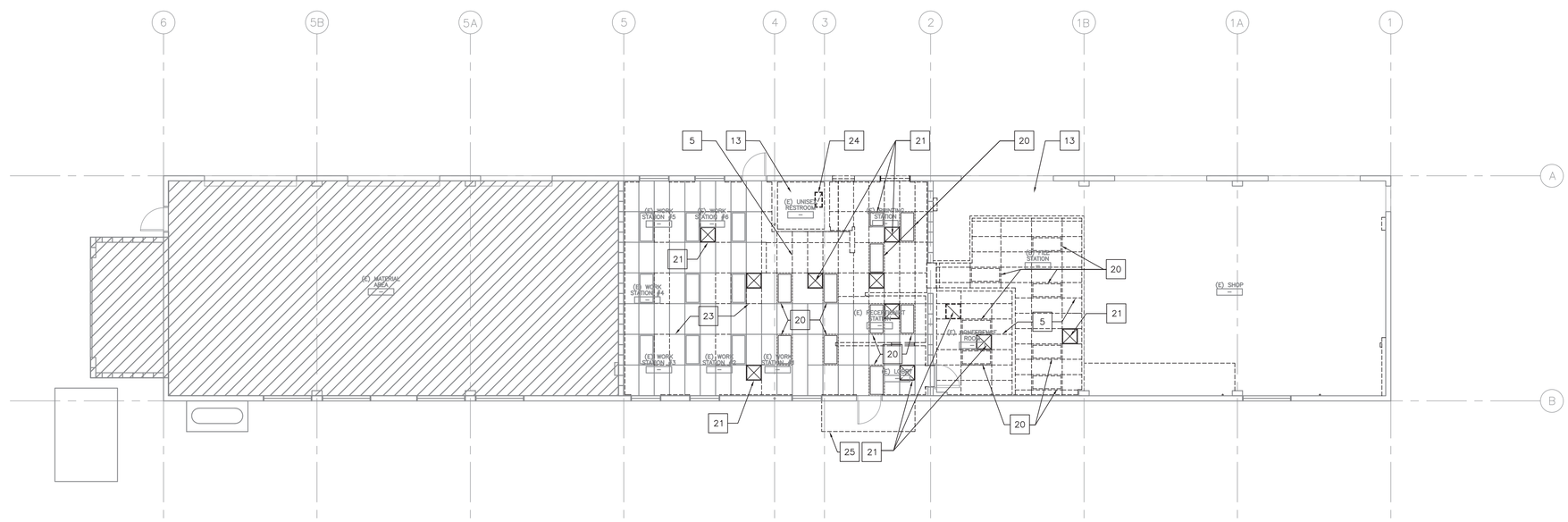

2 DEMOLITION REFLECTED CEILING PLAN
ENGINEERING BUILDING

1/8"=1'-0" 0 2' 4' 8' 16'

NORTH

LEGEND

- EXISTING WALL TO REMAIN
- EXISTING WALL TO BE DEMOLISHED
- EXISTING CONCRETE BLOCK WALL TO REMAIN
- NOT IN SCOPE OF WORK

KEYPLAN

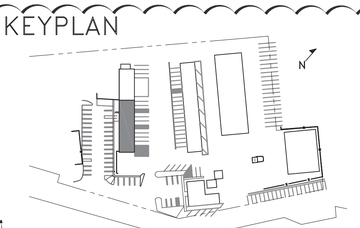

SPECIFIC NOTES

1. (E) DOOR TO BE DEMOLISHED.
2. (E) SINK AND RELATED PLUMBING LINES TO BE DEMOLISHED
3. (E) PLUMBING FIXTURE TO BE DEMOLISHED, TYP.
4. REMOVE (E) WALL SHELF.
5. DEMOLISH PORTION OF (E) T-BAR CEILING GRID, TYP.
6. (E) WALLS TO BE DEMOLISHED, TYP.
7. DEMOLISH (E) UPPER CABINETS.
8. DEMOLISH (E) OVERHEAD STORAGE SHELVES
9. RELOCATE (E) RAIN WATER LEADER PIPE
10. REMOVE (E) SANITARY VENT PIPE. CAP AT FLOOR, WALL AND ROOF.
11. REMOVE ALL (E) OFFICE CUBICLE PARTITIONS, DESKS, AND CUBICLE ACCESSORIES, TYP.
12. (E) CONCRETE BLOCK WALLS TO REMAIN.
13. REMOVE (E) CEILING.
14. DEMOLISH (E) ROLL-UP DOORS AND RELATED DOOR HARDWARE, AND ACCESSORIES.
15. (E) WINDOW TO REMAIN.
16. REMOVE (E) COUNTER AND COUNTERTOP
17. DEMOLISH FURRED WALL.
18. DEMOLISH (E) CASEWORK.
19. REMOVE (E) WINDOW, WINDOW FRAME AND WINDOW BLINDS.
20. REMOVE (E) LIGHT FIXTURE, TYP. SEE ELECTRICAL DRAWINGS FOR MORE INFORMATION.
21. REMOVE MECHANICAL DIFFUSER, TYP. SEE MECHANICAL DRAWINGS FOR MORE INFORMATION.
22. (E) DATA/SERVER RACK CABINET TO BE REMOVED BY OWNER.
23. (E) T-BAR CEILING TO REMAIN.
24. DEMOLISH (E) MECHANICAL DIFFUSER.
25. DEMOLISH (E) EXTERIOR CANOPY SHELTER.
26. DEMOLISH (E) TEL/DATA CLOSET. REROUTE (E) TEL/DATA CONNECTIONS AND EQUIPMENT. COORDINATE WITH OWNER PRIOR TO REROUTING.
27. REMOVE (E) ELECTRICAL PANEL. SEE ELECTRICAL DWGS.
28. DEMOLISH (E) FURRED WALL.
29. DEMOLISH ALL IRRIGATION SPRINKLER CONTROLS, WIRES, CONNECTIONS AND OTHER ASSOCIATED DEVICES.
30. DEMOLISH (E) WALL MOUNTED STEEL FRAMES, DEVICES, EQUIPMENT NOT IN USE.

GENERAL NOTES

A. REFER TO STRUCTURAL, MECHANICAL, PLUMBING AND ELECTRICAL DRAWINGS FOR ADDITIONAL DEMOLITION WORK.

B. CONTRACTOR SHALL INSPECT WALLS & SLABS TO IDENTIFY NON-COMPLIANT PENETRATIONS. PROVIDE COMPLIANT CONSTRUCTION AT ALL NEW AND (E)PENETRATIONS. DRAWINGS LOCATE CONDITIONS VISIBLE AT TIME OF DOCUMENT PREPARATION ONLY. CONTRACTOR IS TO VERIFY ACTUAL CONDITIONS AT START OF CONSTRUCTION.

C. ROUTES OF EGRESS TO BE MAINTAINED CLEAR AT ALL TIMES.

D. ALL CONCRETE SAWCUTTING WORK IF ANY SHALL BE COORDINATED WITH THE PLUMBING DRAWINGS.

E. PROVIDE STICKY MATS AT PROJECT ENTRANCE DOORS TO PREVENT MIGRATION OF DIRT/DEBRIS OUTSIDE OF PROJECT AREA.

F. PRIOR TO THE DEMOLITION OF EACH CONDUIT AND CABLING RUN, THE CONTRACTOR SHALL CONFIRM THE IDENTITY OF EACH EXISTING CONDUIT AND CABLING RUN THAT ENTERS INTO, TERMINATES OR PASSES THROUGH THE AREA OF DEMOLITION.

G. RESTORE FINISHES DAMAGED DURING INSTALLATION AND CONSTRUCTION PERIOD SO NO EVIDENCE REMAINS OF CORRECTION WORK.

H. OWNER TO COVER AND PROTECT (E) EQUIPMENT TO REMAIN IN PLACE DURING CONSTRUCTION. CONTRACTOR TO PROTECT EQUIPMENT FROM ANY AND ALL DAMAGE DURING CONSTRUCTION.

I. REMOVE ALL EXPOSED (E) INTERIOR WALL CONDUITS THAT ARE NOT IN USE. CONFIRM REMOVAL WITH OWNER/ARCHITECT PRIOR TO PROCEEDING WITH THE WORK.

J. CONTRACTOR SHALL INVESTIGATE EXISTING CONDITIONS IMMEDIATELY BELOW, ABOVE & ADJACENT TO PROJECT AREA TO VERIFY EXISTING SYSTEMS AFFECTED BY NEW CONSTRUCTION.

K. TEMPORARILY MOVE ANY (E) SYSTEMS (M, P & E) THAT OBSTRUCT NEW CONSTRUCTION WORK.

L. PATCH AND REPAIR CEILINGS AND WALLS TO MATCH EXISTING CONDITIONS AND SURFACE FINISHES.

M. REMOVE (E) FLOOR FINISH, ASSOCIATED FLOOR UNDERLAYMENT, ALL WALL MOUNTED DISPENSERS AND OTHER ITEMS, TYP.

N. REMOVE ALL SECURITY ALARMS, DOOR AND WINDOW CONTACTS AND ASSOCIATED WIRES AND CONDUITS.

O. REMOVE ALL INTERIOR GAS VALVES, METERS, PIPING AND PIPING SUPPORTS THAT ARE NOT IN USE.

P. REMOVE ALL PEG BOARDS.

Cuschieri Horton Architects
1475 S. Bascom Ave. Suite 204
Campbell, California 95008
408.371.8200 Fx 408.371.8201

LICENSED ARCHITECT
CHRIS ANTHONY CUSCHIERI
C-34957
JAN 31 2021
RENEWAL DATE
STATE OF CALIFORNIA

DEMOLITION FLOOR PLAN & RCP – ENGINEERING BUILDING

TOWN OF LOS GATOS
ENGINEERING BUILDING TI ~~AND STORAGE BUILDING~~
41 MILES AVENUE,
LOS GATOS, CA 95030

REVISIONS

NO.	ITEM	DATE
1	RESPONSE TO FIRST REVIEW COMMENTS	07/17/20

PERMIT #:

SUBMITTAL:
CITY SUBMITTAL SET

DRAWN BY: PP
CHECKED BY: RB
JOB NO: 1826
DATE: 12/04/19

SHEET NO.
A1.0

8/11/2020 9:34 AM

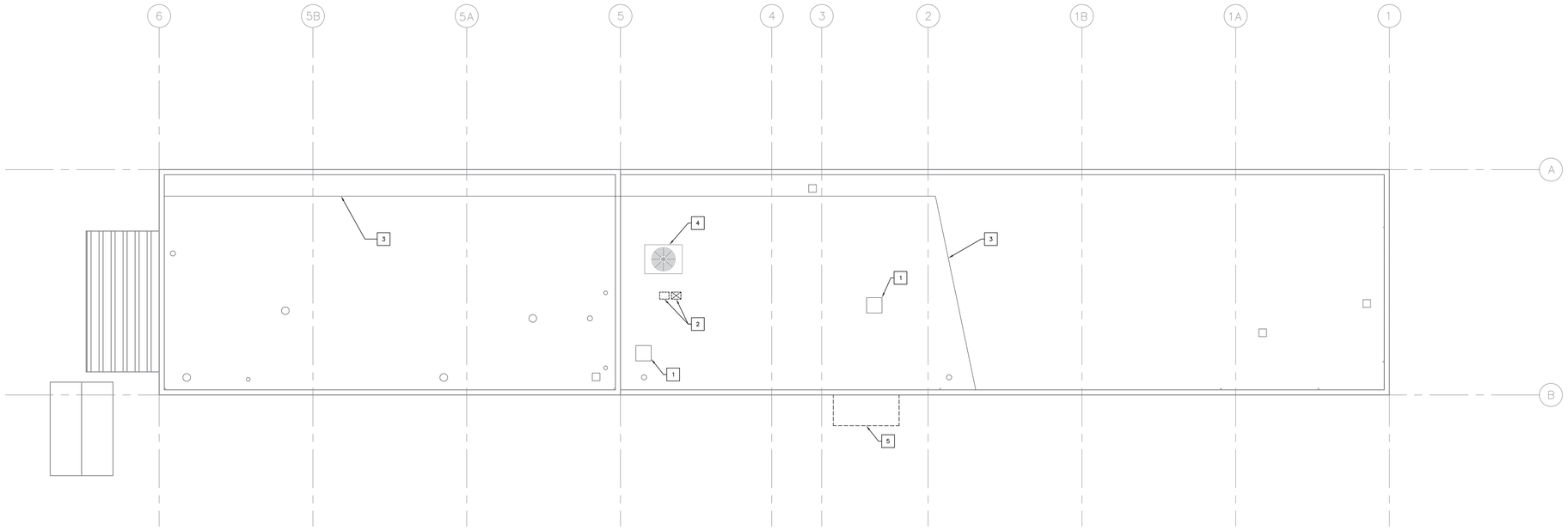

1 DEMOLITION ROOF PLAN
ENGINEERING BUILDING

1/8"=1'-0"
0 2' 4' 8' 16'
NORTH

SPECIFIC NOTES

1. (E) EXHAUST FAN TO REMAIN.
2. DEMOLISH PORTION OF ROOF TO ACCOMMODATE MECHANICAL DUCTS. SEE MECHANICAL AND STRUCTURAL DRAWINGS FOR MORE INFORMATION.
3. (E) CONDUIT, VERIFY IN FIELD. COORDINATE WITH OWNER IF THIS CAN BE REMOVED.
4. (E) HVAC EQUIPMENT TO REMAIN.
5. DEMOLISH (E) ROOF CANOPY.

GENERAL NOTES

A. REFER TO STRUCTURAL, MECHANICAL, PLUMBING AND ELECTRICAL DRAWINGS FOR ADDITIONAL DEMOLITION WORK.

B. CONTRACTOR SHALL INSPECT ROOF TO IDENTIFY NON-COMPLIANT PENETRATIONS. PROVIDE COMPLIANT CONSTRUCTION AT ALL NEW AND (E) PENETRATIONS. CONTRACTOR IS TO VERIFY ACTUAL CONDITIONS AT START OF CONSTRUCTION.

C. PRIOR TO THE DEMOLITION OF EACH CONDUIT AND CABLING RUN, THE CONTRACTOR SHALL CONFIRM THE IDENTITY OF EACH EXISTING CONDUIT AND CABLING RUN THAT ENTERS INTO, TERMINATES OR PASSES THROUGH THE AREA OF DEMOLITION.

D. RESTORE FINISHES DAMAGED DURING INSTALLATION AND CONSTRUCTION PERIOD SO NO EVIDENCE REMAINS OF CORRECTION WORK.

E. OWNER TO COVER AND PROTECT (E) EQUIPMENT TO REMAIN IN PLACE DURING CONSTRUCTION. CONTRACTOR TO PROTECT EQUIPMENT FROM ANY AND ALL DAMAGE DURING CONSTRUCTION.

F. REMOVE ALL ROOF EXPOSED (E) CONDUITS NOT BEING USED. CONFIRM REMOVAL WITH OWNER/ARCHITECT PRIOR TO PROCEEDING WITH THE WORK.

G. CONTRACTOR SHALL INVESTIGATE EXISTING CONDITIONS IMMEDIATELY BELOW, ABOVE & ADJACENT TO PROJECT AREA TO VERIFY EXISTING SYSTEMS AFFECTED BY NEW CONSTRUCTION.

H. TEMPORARILY MOVE ANY (E) SYSTEMS (M, P & E) THAT OBSTRUCT NEW CONSTRUCTION WORK.

I. PATCH AND REPAIR ROOF FINSH TO MATCH EXISTING CONDITIONS AND SURFACE FINISHES.

KEYPLAN

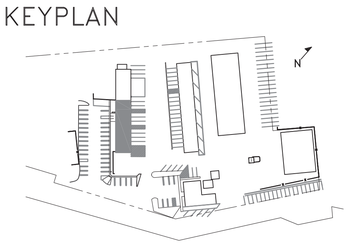

Cuschieri Horton Architects
1475 S. Bascom Ave. Suite 204
Campbell, California 95008
408.371.8200 Fx 408.371.8201

LICENSED ARCHITECT
RAMEL ANTHONY BORDONARO
C# 34957
JAN 31 2021
RENEWAL DATE
STATE OF CALIFORNIA

DEMOLITION ROOF PLAN – ENGINEERING BUILDING

TOWN OF LOS GATOS
ENGINEERING BUILDING TI ~~AND STORAGE BUILDING~~
41 MILES AVENUE,
LOS GATOS, CA 95030

REVISIONS

NO.	ITEM	DATE

PERMIT #:

SUBMITTAL:
CITY SUBMITTAL SET

DRAWN BY: PP
CHECKED BY: RB
JOB NO: 1826
DATE: 12/04/19

SHEET NO.
A1.1

8/11/2020 9:43 AM

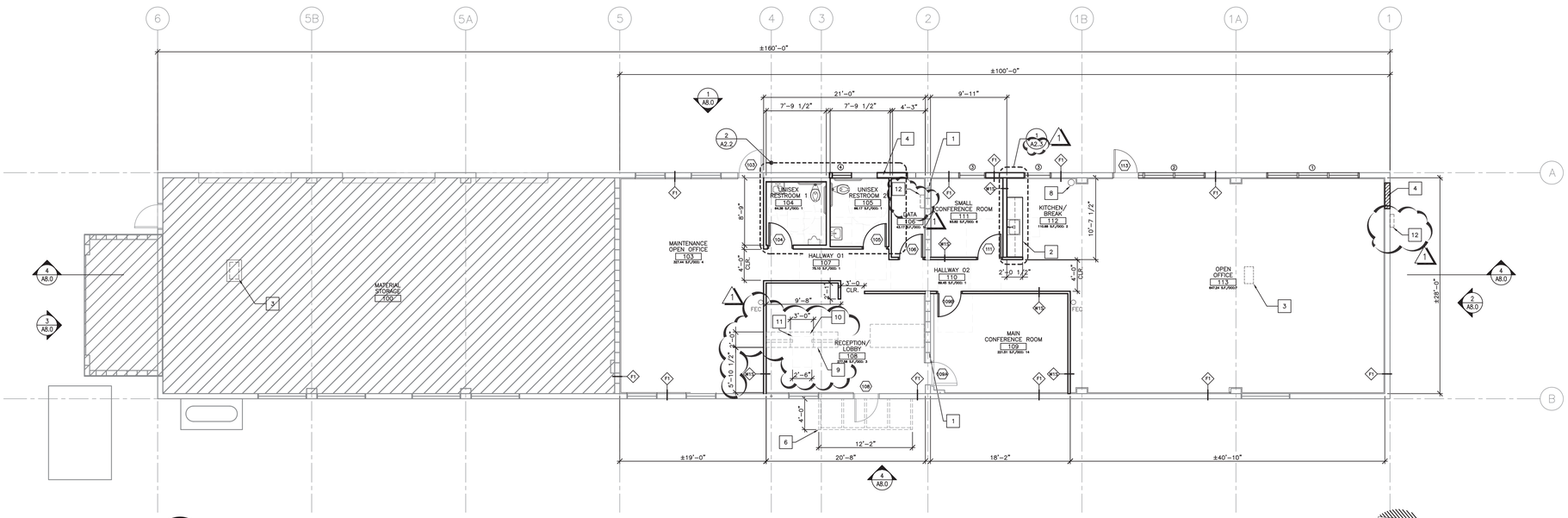

1 FLOOR PLAN
ENGINEERING BUILDING

1/8"=1'-0" 0 2' 4' 8' 16'

NORTH

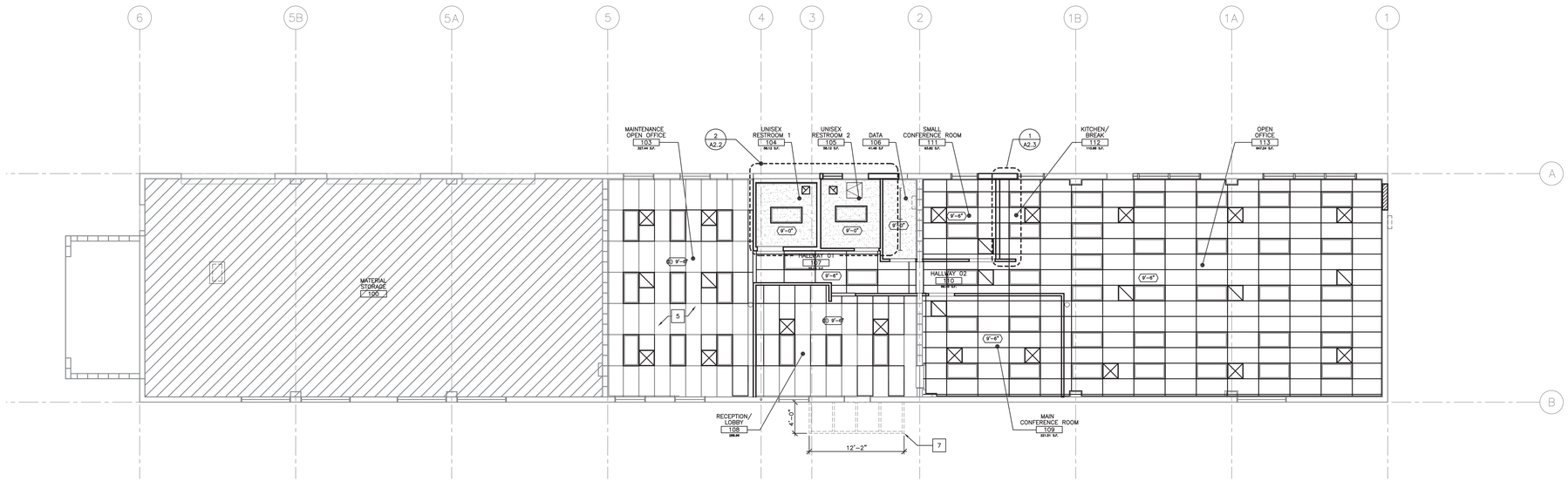

2 REFLECTED CEILING PLAN
ENGINEERING BUILDING

1/8"=1'-0" 0 2' 4' 8' 16'

NORTH

SPECIFIC NOTES

1. (E) CONCRETE BLOCK WALL TO REMAIN.
2. COUNTERTOP AND CASEWORK, SEE SHEET A9.3 FOR MORE INFORMATION.
3. CAP (E) SANITARY SEWER DRAIN FLUSH TO THE (E) CONCRETE FLOOR. SEE PLUMBING DRAWINGS FOR MORE INFORMATION.
4. INFILL WALL, MATCH EXISTING WALL FINISH. SEE STRUCTURAL DRAWINGS FOR MORE INFORMATION.
5. (E) T-BAR CEILING TO REMAIN.
6. EXTERIOR CANOPY ABOVE.
7. EXTERIOR CANOPY, SEE STRUCTURAL DRAWINGS FOR MORE INFORMATION.
8. WATER COOLER.
9. 34" HIGH RECEPTION COUNTER BY OWNER.
10. 30" LONG ACCESSIBLE COUNTERTOP SPACE.
11. OPEN BELOW. ACCESSIBLE CLEAR FLOOR SPACE BELOW COUNTERTOP WITH 27" KNEE SPACE ABOVE FINISH FLOOR.
12. ELECTRICAL PANEL. SEE ELECTRICAL DRAWINGS FOR MORE INFORMATION.

GENERAL NOTES

A. ALL DIMENSIONS ARE GIVEN FINISHED SURFACE UNLESS NOTED AS "CLR" WHICH INDICATES A REQUIRED CLEAR DIMENSION BETWEEN FINISHED SURFACES. WINDOWS AND WALL OPENINGS ARE DIMENSIONED TO CENTER OF OPENING, U.O.N. DOORS AND WINDOWS WITHOUT DIMENSIONS ARE TO BE CENTERED WITHIN THE WALL, U.N.O.

B. VERIFY CLEARANCES FOR ALL EQUIPMENT PRIOR TO INSTALLATION.

C. TYPICAL WALL TYPE SHALL BE 'W1', U.N.O., SEE SHT. A0.01 FOR ADD'L INFO.

D. SEE SHEET A0.01 FOR WALL TYPE LEGEND AND GRAPHIC SYMBOL INFORMATION.

E. SEE SHEET A0.2 FOR EXITING, EGRESS, AND ACCESSIBILITY INFORMATION AND NOTES.

F. SEE SHT. A5.2 FOR ADD'L ROOM MATERIAL AND FINISH INFO. CONTRACTOR SHALL FULLY COORDINATE FINAL FINISH SELECTIONS WITH OWNER'S REPRESENTATIVE PRIOR TO FABRICATION OR INSTALLATION.

G. SEE SHEET A0.0 FOR TYP. DOOR CLEARANCE DETAILS

H. COORDINATE AND PROVIDE ACCESS DOOR LOCATIONS OR COVER PLATES FOR HVAC AND PLUMBING WORK AND AS REQ'D BY CODE AND THESE PLANS TO FACILITATE NEW CONSTRUCTION. LOCATE TO PERMIT FULL ACCESS TO DAMPER, CONTROLS, VALVES, ETC. INTENDED TO BE SERVED BY ACCESS DOOR.

I. PATCH AND PAINT EXISTING CONSTRUCTION OUTSIDE PROJECT AREA IMPACTED BY INSTALLATION OF NEW PIPING, CONDUIT OR OTHER SYSTEMS.

J. CONTRACTOR SHALL INVESTIGATE (E) CONDITIONS IMMEDIATELY BELOW, ABOVE & ADJACENT TO PROJECT AREA TO VERIFY (E) SYSTEMS AND UTILITIES AFFECTED BY NEW CONSTRUCTION.

LEGEND

EXISTING WALL TO REMAIN

EXISTING CONCRETE BLOCK WALL TO REMAIN

FEC WALL MOUNTED FIRE EXTINGUISHER

NOT IN SCOPE OF WORK

KEYPLAN

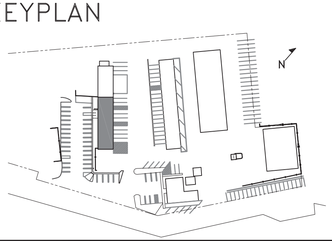

Cuschieri Horton Architects
1475 S. Bascom Ave. Suite 204
Campbell, California 95008
408.371.8200 Fx 408.371.8201

LICENSED ARCHITECT
CS-34357
JAN 31 2021
GENERAL DATE
STATE OF CALIFORNIA

FLOOR PLAN & RCP
ENGINEERING BUILDING

TOWN OF LOS GATOS
ENGINEERING BUILDING TI ~~AND STORAGE BUILDING~~
41 MILES AVENUE,
LOS GATOS, CA 95030

REVISIONS

NO.	ITEM	DATE
1	RESPONSE TO FIRST REVIEW COMMENTS	07/17/20

PERMIT #:

SUBMITTAL:
CITY SUBMITTAL SET

DRAWN BY: DN
CHECKED BY: RB
JOB NO: 1826
DATE: 12/04/19

SHEET NO.
A2.0

8/11/2020 9:44 AM

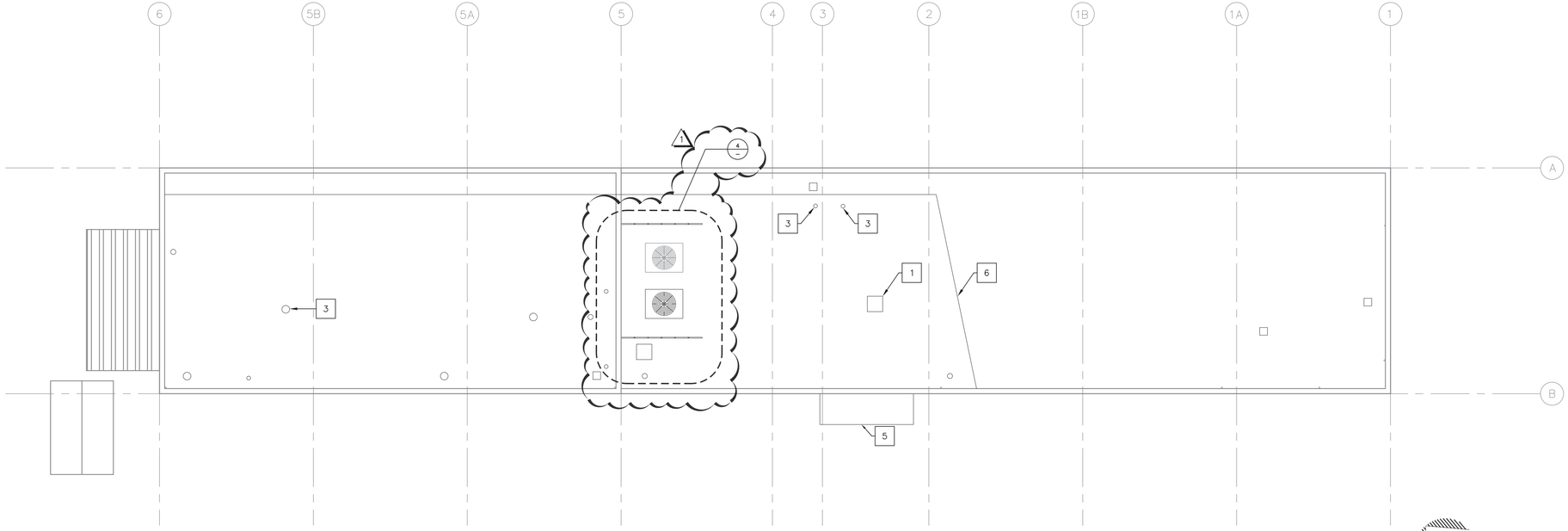

1 ROOF PLAN
ENGINEERING BUILDING

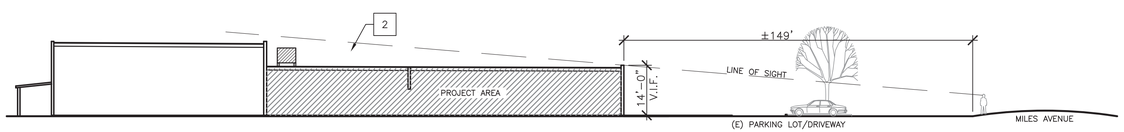

2 LINE OF SIGHT DIAGRAM
ENGINEERING BUILDING 1"=20'-0

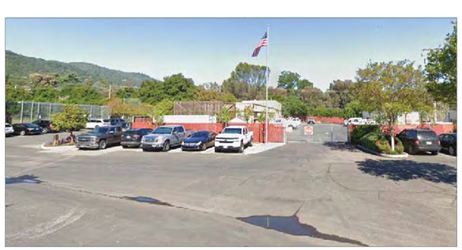

3 EXISTING LINE OF SITE PHOTOS (ENGINEERING BUILDING)
VIEW FROM MILES AVENUE NTS

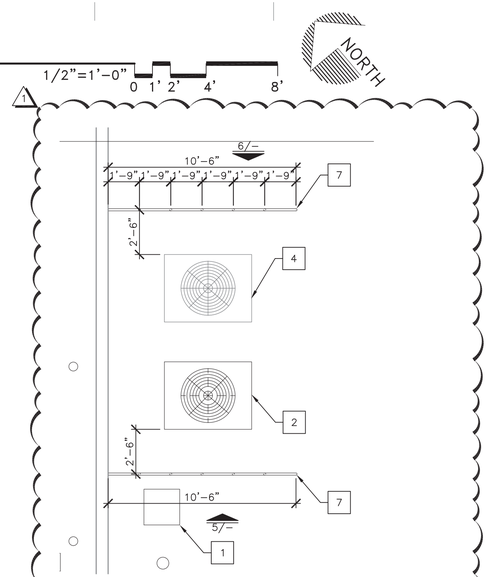

4 ROOF GUARD RAIL PLAN
ENGINEERING BUILDING 1/4"=1'-0"

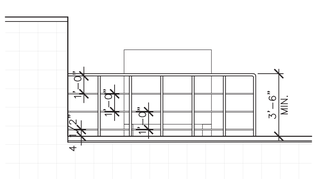

5 ELEVATION
GUARD RAIL 1/4"=1'-0"

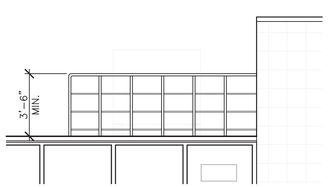

6 ELEVATION
GUARD RAIL 1/4"=1'-0"

SPECIFIC NOTES

1. (E) EXHAUST FAN TO REMAIN.
2. HVAC UNIT, SEE MECHANICAL AND STRUCTURAL DRAWINGS FOR MORE INFORMATION
3. VENT PIPE, SEE MECHANICAL DRAWINGS FOR MORE INFORMATION.
4. (E) HVAC EQUIPMENT TO REMAIN.
5. ROOF CANOPY, SEE DETAIL 9/A9.0.
6. (E) CONDUIT. VERIFY IN FIELD. COORDINATE W/OWNER IF THIS CAN BE REMOVED.
7. METAL GUARD RAIL @ 42" MIN. HEGIHT. SEE STRUCTURAL DRAWINGS FOR MORE INFORMATION.

GENERAL NOTES

A. REFER TO STRUCTURAL, MECHANICAL, PLUMBING AND ELECTRICAL DRAWINGS FOR ADDITIONAL DEMOLITION WORK.

B. CONTRACTOR SHALL INSPECT ROOF TO IDENTIFY NON-COMPLIANT PENETRATIONS. PROVIDE COMPLIANT CONSTRUCTION AT ALL NEW AND (E)PENETRATIONS. DRAWINGS LOCATE CONDITIONS VISIBLE AT TIME OF DOCUMENT PREPARATION ONLY. CONTRACTOR IS TO VERIFY ACTUAL CONDITIONS AT START OF CONSTRUCTION.

C. RESTORE FINISHES DAMAGED DURING INSTALLATION AND CONSTRUCTION PERIOD SO NO EVIDENCE REMAINS OF CORRECTION WORK.

D. CONTRACTOR TO COVER AND PROTECT (E) EQUIPMENT TO REMAIN IN PLACE DURING CONSTRUCTION. CONTRACTOR TO PROTECT EQUIPMENT FROM ANY AND ALL DAMAGE DURING CONSTRUCTION.

E. CONTRACTOR SHALL INVESTIGATE EXISTING CONDITIONS IMMEDIATELY BELOW, ABOVE & ADJACENT TO PROJECT AREA TO VERIFY EXISTING SYSTEMS AFFECTED BY NEW CONSTRUCTION.

F. TEMPORARILY MOVE ANY (E) SYSTEMS (M, P & E) THAT OBSTRUCT NEW CONSTRUCTION WORK.

G. PATCH AND REPAIR CEILINGS AND WALLS TO MATCH EXISTING CONDITIONS AND SURFACE FINISHES.

KEYPLAN

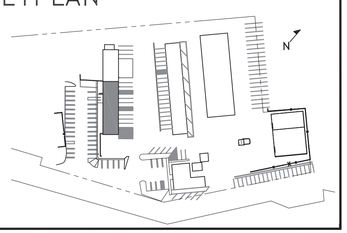

Cuschieri Horton Architects
1475 S. Bascom Ave. Suite 204
Campbell, California 95008
408.371.8200 Fx 408.371.8201

LICENSED ARCHITECT
CHRISTOPHER ANTHONY CUSCHIERI
C-34957
JAN 31 2021
RENEWAL DATE
STATE OF CALIFORNIA

ROOF PLAN & LINE OF SIGHT DIAGRAM
ENGINEERING BUILDING

TOWN OF LOS GATOS
ENGINEERING BUILDING TI ~~AND STORAGE BUILDING~~
41 MILES AVENUE,
LOS GATOS, CA 95030

REVISIONS

NO.	ITEM	DATE
1	RESPONSE TO FIRST REVIEW COMMENTS	07/17/20

PERMIT #:

SUBMITTAL:
CITY SUBMITTAL SET
DRAWN BY: SG
CHECKED BY: RB
JOB NO: 1826
DATE: 12/04/19

SHEET NO.
A2.1

8/11/2020 9:44 AM

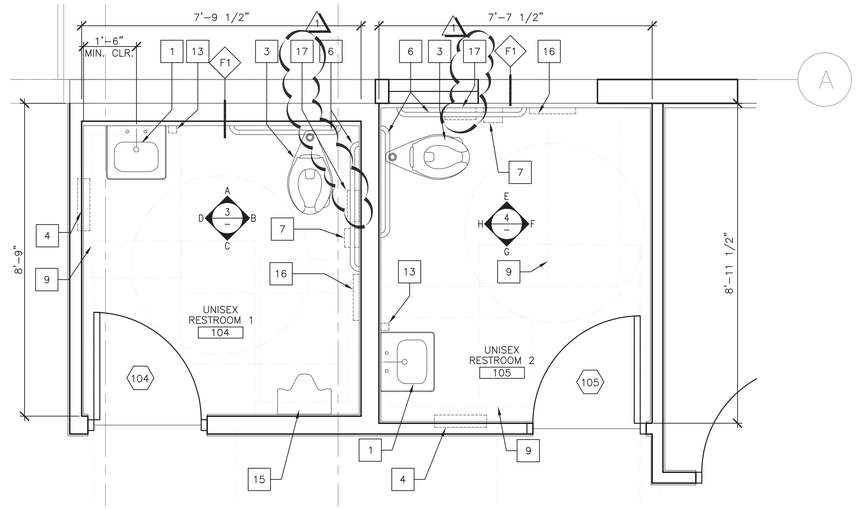

2 ENLARGED FLOOR PLAN
UNISEX RESTROOMS 104 & 105

1/2"=1'-0" 0 1' 2' 4'

NORTH

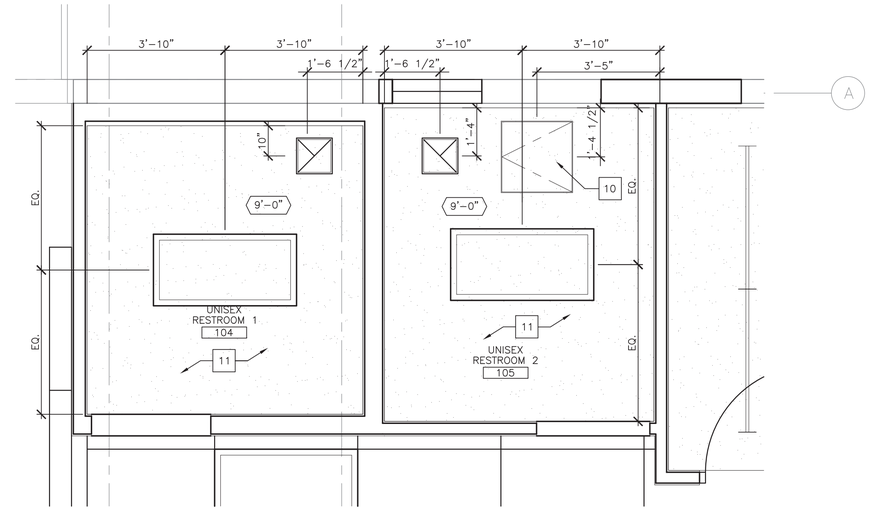

1 ENLARGED REFLECTED CEILING PLAN
UNISEX RESTROOMS 104 & 105

1/2"=1'-0" 0 1' 2' 4'

NORTH

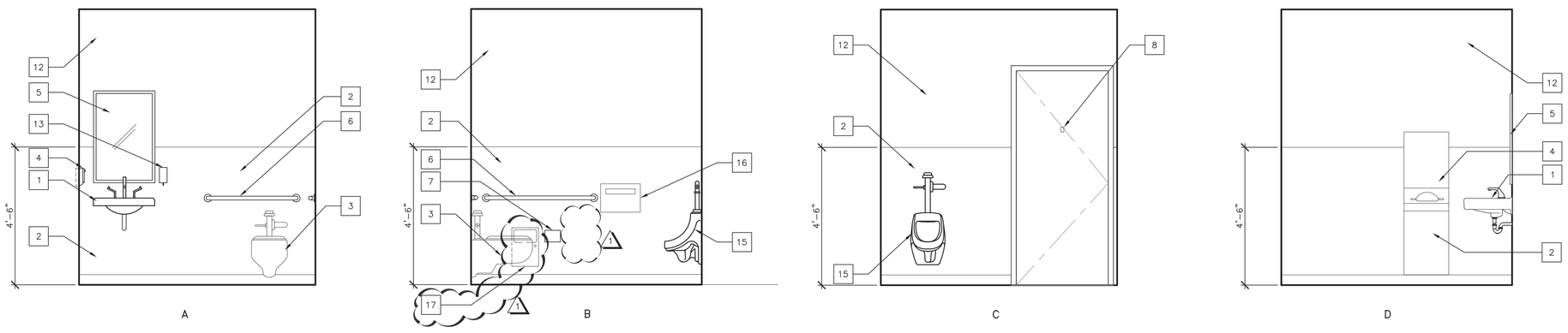

3 INTERIOR ELEVATIONS
UNISEX RESTROOM 104 – ENGINEERING BUILDING

1/2"=1'-0" 0 1' 2' 4'

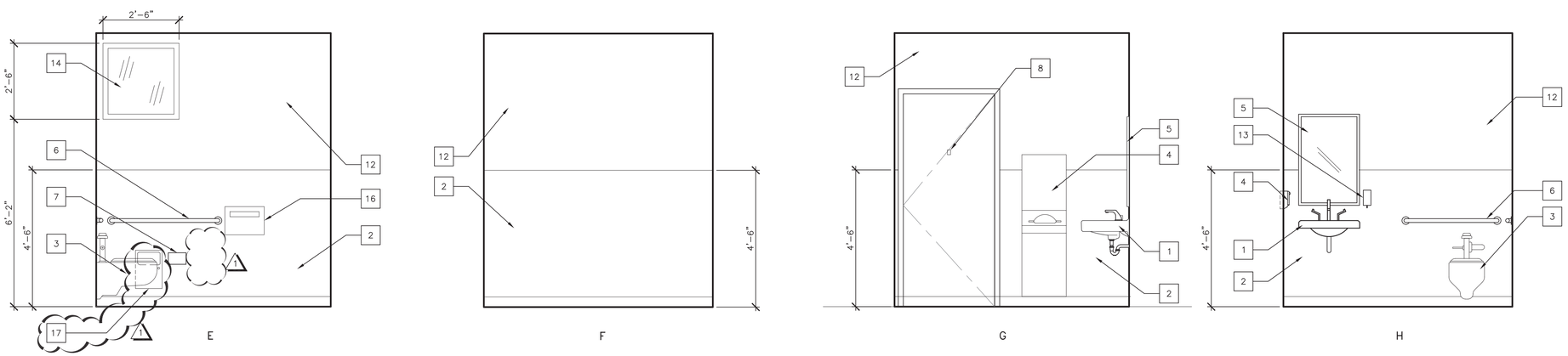

4 INTERIOR ELEVATIONS
UNISEX RESTROOM 105 – ENGINEERING BUILDING

1/2"=1'-0" 0 1' 2' 4'

SPECIFIC NOTES

1. LAVATORY, SEE PLUMBING DRAWINGS
2. FRP. SEE SHEET A5.1 FOR MORE INFORMATION.
3. WATER CLOSET, SEE PLUMBING DRAWINGS.
4. RECESSED CONVERTIBLE PAPER TOWEL DISPENSER / WASTE RECEPTACLE, PTW–1, SEE WALL AND TOILET ACCESSORIES SCHEDULE ON SHEET A5.2.
5. MIRROR, MR–1, SEE WALL AND TOILET ACCESSORIES SCHEDULE ON SHEET A5.2. 1
6. GRAB BAR, SEE WALL AND TOILET ACCESSORIES SCHEDULE ON SHEET A5.2. SEE DETAIL 1/A9.2. 1
7. TOILET PAPER DISPENSER, TP–2, SEE WALL AND TOILET ACCESSORIES SCHEDULE ON SHEET A5.2.
8. COAT HANGER – CH–1. SEE WALL AND TOILET ACCESSORIES SCHEDULE ON SHEET A5.2.
9. 30 X 48 FIXTURE CLEARANCE.
10. CEILING ACCESS DOOR PANEL.
11. GYPSUM BOARD CEILING. SEE SHEET A9.1 FOR MORE INFORMATION.
12. PAINTED, SEE COLOR AND MATERIAL SCHEDULE ON SHEET A5.2.
13. SOAP DISPENSER, SD–1, SEE WALL AND TOILET ACCESSORIES SCHEDULE ON SHEET A5.2.
14. WINDOW, SEE DOOR & WINDOW SCHEDULE ON A5.0. PATCH SURROUNDING OPENING & FINISH TO MATCH EXISTING
15. URINAL, SEE PLUMBING DRAWINGS.
16. TOILET SEAT COVER DISPENSER, TSC–1, SEE WALL AND TOILET ACCESSORIES SCHEDULE ON SHEET A5.2.
17. SANITARY WASTE RECEPTACLE – SR–1 1

GENERAL NOTES

A. SEE SHEET A5.2 FOR WALL, TOILET & EQUIPMENT ACCESSORIES SCHEDULE.

B. SEE SHEET A0.0 FOR TYPICAL TOILET ROOM MOUNTING HEIGHTS.

C. TYPICAL WALL TYPE SHALL BE 'W1', U.N.O., SEE SHT. A0.01 FOR ADD'L INFO.

D. SEE DETAIL 7/A9.0 FOR TYP. WALL BLOCKING

KEYPLAN

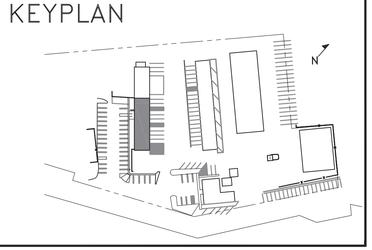

Cuschieri Horton Architects
1475 S. Bascom Ave. Suite 204
Campbell, California 95008
408.371.8200 Fx 408.371.8201

LICENSED ARCHITECT
C-34957
JAN 31 2021
RENEWAL DATE
STATE OF CALIFORNIA

ENLARGED FLOOR PLANS & INTERIOR ELEV. – RESTROOMS – ENGR. BLDG.

TOWN OF LOS GATOS
ENGINEERING BUILDING TI ~~AND STORAGE BUILDING~~
41 MILES AVENUE,
LOS GATOS, CA 95030

REVISIONS

NO.	ITEM	DATE
1	RESPONSE TO FIRST REVIEW COMMENTS	07/17/20

PERMIT #:

SUBMITTAL:
CITY SUBMITTAL SET

DRAWN BY: SS
CHECKED BY: RB
JOB NO: 1826
DATE: 12/04/19

SHEET NO.
A2.2

8/11/2020 9:46 AM

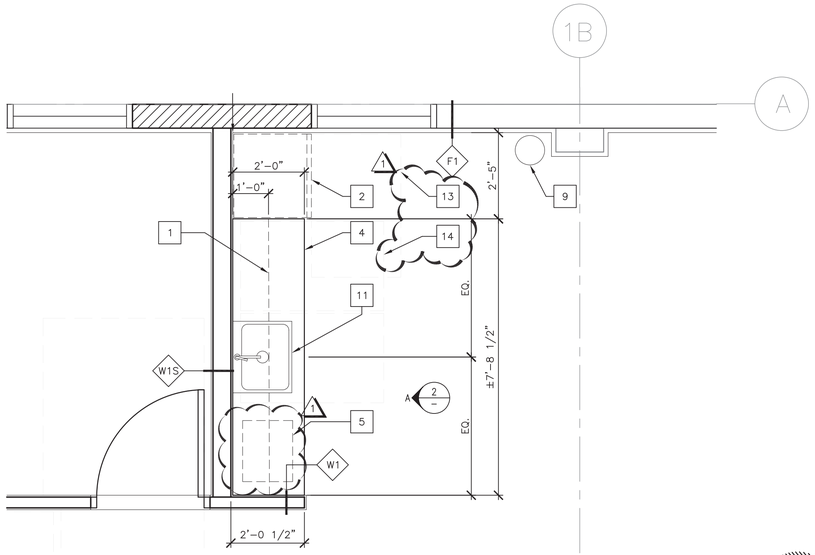

1 ENLARGED FLOOR PLAN
KITCHEN/BREAK 112 – ENGINEERING BLDG. 1/2"=1'-0"

0 1' 2' 4' 8'

NORTH

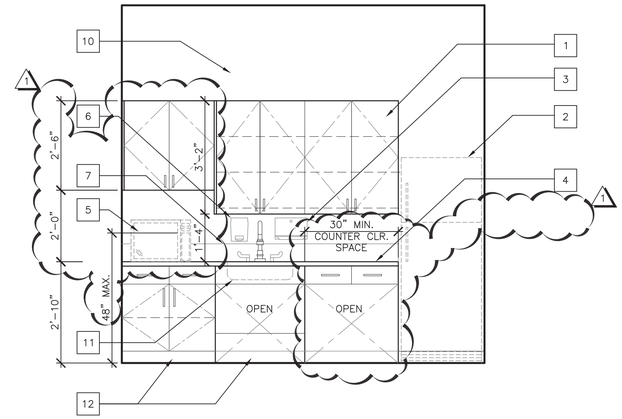

2 INTERIOR ELEVATIONS
KITCHEN/BREAK 112 – ENGINEERING BLDG. 1/2"=1'-0"

0 1' 2' 4' 8'

SPECIFIC NOTES

1. UPPER CABINET, TYP.
2. REFRIGERATOR EQUIPMENT BY OWNER.
3. PAPER TOWEL DISPENSER.
4. COUNTERTOP, SEE DETAILS ON SHEET A9.3
5. MICROWAVE EQUIPMENT BY OWNER.
6. SOAP DISPENSER.
7. BACKSPLASH, TYP.
8. CASEWORK, SEE DETAILS ON SHEET A9.3
9. WATER COOLER STATION.
10. PAINTED, SEE FINISH SCHEDULE ON SHEET A5.2
11. SINK – KS–1, SEE PLUMBING DRAWINGS.
12. WALL BASE TS–1, SEE COLOR & MATERIAL SCHEDULE ON SHEET A5.2
13. 30" X 48" CLEAR FLOOR SPACE FOR PARALLEL APPROACH TO APPLIANCE.
14. 30" X 48 CLEAR FLOOR SPACE FRONT APPROACH TO ACCESSIBLE COUNTERTOP WORK SPACE.

KEYPLAN

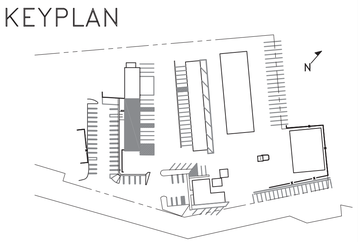

Cuschieri Horton Architects
1475 S. Bascom Ave, Suite 204
Campbell, California 95008
408.371.8200 Fx 408.371.8201

LICENSED ARCHITECT
C-34957
JAN 31 2021
RENEWAL DATE
STATE OF CALIFORNIA

ENLARGED FLR PLAN–KIT./BREAK 112
INTERIOR ELEV. – ENGINEERING BLDG

TOWN OF LOS GATOS
ENGINEERING BUILDING TI ~~AND STORAGE BUILDING~~
41 MILES AVENUE,
LOS GATOS, CA 95030

REVISIONS

NO.	ITEM	DATE
1	RESPONSE TO FIRST REVIEW COMMENTS	07/17/20

PERMIT #:

SUBMITTAL:
CITY SUBMITTAL SET

DRAWN BY: DN
CHECKED BY: RB
JOB NO: 1826
DATE: 12/04/19

SHEET NO.
A2.3

8/11/2020 9:47 AM

DOOR SCHEDULE

ROOM/AREA	RM./DOOR NO.	RM./DOOR TYPE	DOOR SIZE – WIDTH X HEIGHT X 1 3/4"	DOOR MAT.	DOOR FIN.	FRAME MAT.	FRAME FIN.	UL	HRDWR. GRP.	FOOTNOTES
MAINTENANCE OPEN OFFICE	103	B	(E) 3'–0" x 7'–0"	SC	P	HM	P	–	–	–
UNISEX RESTROOM 1	104	A	3'–0" x 6'–8"	SC	P	AL	AN	–	3	1,2
UNISEX RESTROOM 2	105	A	3'–0" x 6'–8"	SC	P	AL	AN	–	3	1,2
1 DATA	106	A	3'–0" x 6'–8"	SC	P	AL	AN	–	2	–
RECEPTION/LOBBY	108	B	(E) 3'–0" x 7'–2"	SC	P	HM	P	–	–	3
MAIN CONFERENCE ROOM	109A	A	(E) 3'–0" x 7'–0"	SC	P	HM	P	–	1	–
MAIN CONFERENCE ROOM	109B	B	3'–0" x 7'–0"	SC	P	AL	AN	–	1	–
SMALL CONFERENCE ROOM	111	B	3'–0" x 7'–0"	SC	P	AL	AN	–	1	–
OPEN OFFICE	113	C	3'–0" x 8'–0"	SC	P	AL	AN	–	4	4

WINDOW SCHEDULE

WINDOW NO.	WINDOW SIZE – WIDTH X HEIGHT	GLAZING THK.	GLAZING TYPE	FRAME MAT.	FRAME FIN.	UL	FOOTNOTES
1	12'–0" x 9'–0"	1/4	CDG	AL	AN	–	1
2	12'–0" x 9'–0"	1/4	CDG	AL	AN	–	1
3	3'–6" x 9'–0"	1/4	CDG	AL	AN	–	1
4	2'–6" x 2'–0"	1/4	CDG	AL	AN	–	1

WINDOW SCHEDULE LEGEND (ABBREVIATIONS ARE TYP., NOT ALL MAY BE USED)

IGU	INSULATED GLAZING UNIT	CDG	CLEAR, DOUBLE GLAZED	LL	LEAD LINED
AL	ALUMINUM	HM	HOLLOW METAL	OB	OBSCURED GLASS
AN	CLEAR ANODIZED	P	PAINTED		

WINDOW SCHEDULE FOOTNOTES

1. VERIFY ALL EXISTING WINDOW OPENING PRIOR TO FABRICATION OF WINDOWS.

DOOR SCHEDULE LEGEND

MATERIAL ABBREVIATIONS CODE	DESCRIPTION	FINISH LIST CODE	DESCRIPTION	OPTION LIST CODE	DESCRIPTION	MANUFACTURER ABBREVIATIONS CODE	DESCRIPTION
AL	ALUMINUM	26D	SATIN CHROME	EL	ELECTRIC LATCH RETRACTION	AB	ABH MANUFACTURING INC.
AN	CLEAR ANODIZED	499	POLISHED BRASS, NO LACQUER (US3NL)	B4E	BEVELED 4 EDGES	BY	BY OTHERS
CLR	CLEAR	626	SATIN CHROMIUM PLATED	CTSK	COUNTER SINKING OF KICK AND MOP PLATES	NA	NATIONAL GUARD
HM	HOLLOW METAL	628	SATIN ALUMINUM, CLEAR ANODIZED			SC	SCHLAGE
P	PAINT	630	SATIN STAINLESS STEEL			SD	STANLEY DOOR CLOSERS
ST	STEEL	689	ALUMINUM PAINTED			SH	STANLEY COMMERCIAL HARDWARE
SC	SOLID CORE WOOD	GREY	GREY			SIMP	SIMPLEX UNICAN
T	TEMPERED GLASS	SP28	LACQUER SPRAYED ALUMINUM			ST	STANLEY
WD	STAINED WOOD VENEER	US26D	CHROMIUM PLATED, DULL			TR	TRIMCO
		US32D	STAINLESS STEEL, DULL			VO	VON DUPRIN

DOOR SCHEDULE FOOTNOTES

1. COAT HOOK ON INTERIOR SIDE @ 48" MAX. A.F.F.
2. PROVIDE TACTILE ACCESSIBLE AND EXIT SIGNAGE. SEE FLOOR PLANS FOR MORE INFO.
3. PROVIDE SIGNAGE ON DOOR INDICATING "THIS DOOR TO REMAIN UNLOCKED WHEN BUILDING IS OCCUPIED". LETTERING SHALL BE BLOCK 2" HIGH VINYL OR APPROVED EQUAL.
4. DOOR IS A PART OF A STOREFRONT SYSTEM. SEE WINDOW TYPE 2.

1

ALL EGRESS DOORS SHALL BE READILY OPENABLE FROM THE EGRESS SIDE, WITH A SINGLE ACTION, WITHOUT THE USE OF A KEY, THUMB TURN, OR ANY SPECIAL KNOWLEDGE OR EFFORT.

NOTE: ONLY THE MAIN DOOR, EITHER A SINGLE DOOR OR A SET OF DOUBLE DOORS, MAY BE PERMITTED TO HAVE KEYED–OPERATED LOCKING DEVICES IF THE LOCKING DEVICE IS REDILY DISTINGUISHABLE AS LOCKED, IN ACCORDANCE WITH CFC 1010.1.9.3.2.1.

NOTE: A DEAD BOLT OR A THUMB BOLT LOCK IS NOT ALLOWED.

DOOR TYPES

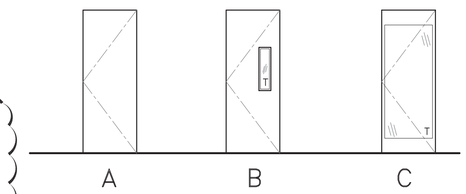

DOOR HARDWARE GROUPS

HARDWARE GROUPS

SET #01 –

3 HINGES	FBB179 4 1/2 X 4 1/2	US26D	ST
1 PRIVACY LOCK	9K3–7A14C PATD	626	BE
1 WALL BUMPER	1270WV	630	TR
1 COAT HOOK	3071	630	TR
1 SET OF GASKETING	5050 B HEAD & JAMBS		NA

SET #02 –

3 HINGES	FBB179 4 1/2 X 4 1/2	US26D	ST
1 STOREROOM LOCK	9K3–7D14C PATD	626	BE
1 WALL BUMPER	1270WV	630	TR
3 DOOR SILENCERS	1229A	GREY	TR

SET #03 –

3 HINGES	FBB179 4½ X 4½	US26D	ST
1 PRIVACY LOCK	9K3–0L14C	626	BE
1 WALL BUMPER	1270WV	630	TR
1 COAT HOOK	3071	630	TR
1 SET OF GASKETING	5050 B HEAD & JAMBS		NA

SET #04 –

1 CONTINUOUS HINGES	661HD UL 83"	AL	ST
1 DEADLOCK	MS1850SN	628	AD
1 THRESHOLD BOLT	4015		AD
1 MORTISE CYLINDERS	X A.R. CAM1E–74 PATD C181	626	BE
1 PUSH/PULL SETS	1747	630	TR
1 CONCEALED CLOSERS	203_ SERIES	AL	LC
1 DOOR STOPS W/ HOLDER	1209HO	630	TR
1 DOOR SWEEPS	200	NA	NA
1 SADDLE THRESHOLD	425 X 10–24 SSMS/LA	AL	NA
1 EXIT INDICATOR	4089–00	130	AD

WINDOW TYPES

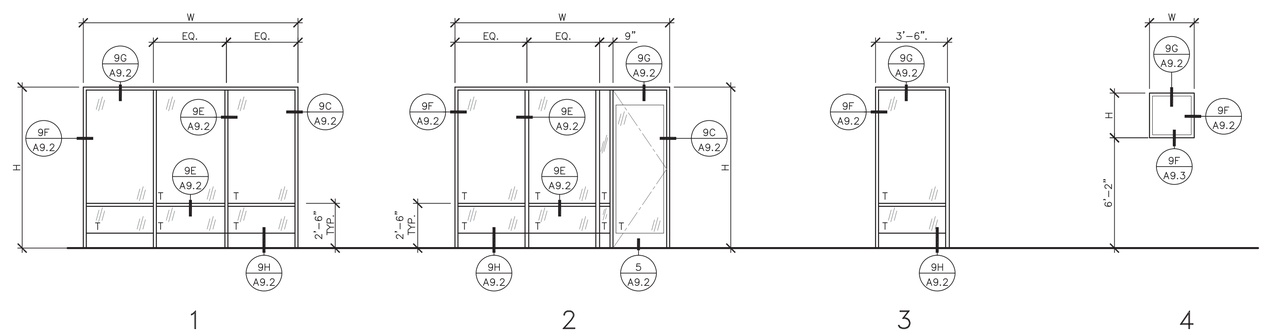

Cuschieri Horton Architects

1475 S. Bascom Ave. Suite 204
Campbell, California 95008
408.371.8200 Fx 408.371.8201

LICENSED ARCHITECT
C–34957
JAN 31 2021
RENEWAL DATE
STATE OF CALIFORNIA

DOOR & WINDOW SCHEDULE – ENGINEERING BUILDING

TOWN OF LOS GATOS
ENGINEERING BUILDING TI ~~AND STORAGE BUILDING~~
41 MILES AVENUE,
LOS GATOS, CA 95030

REVISIONS

NO.	ITEM	DATE
1	RESPONSE TO FIRST REVIEW COMMENTS	07/17/20

PERMIT #:

SUBMITTAL:
CITY SUBMITTAL SET

DRAWN BY: DN
CHECKED BY: RB

JOB NO: 1826
DATE: 12/04/19

SHEET NO.
A5.0

8/11/2020 9:49 AM

DOOR HARDWARE SPECIFICATIONS

PART 1 – GENERAL

1.1 SUMMARY:

A. SECTION INCLUDES: FINISH HARDWARE FOR DOOR OPENINGS, EXCEPT AS OTHERWISE SPECIFIED HEREIN.
1. DOOR HARDWARE FOR STEEL (HOLLOW METAL) DOORS.
2. DOOR HARDWARE FOR ALUMINUM DOORS.
3. DOOR HARDWARE FOR WOOD DOORS.
4. DOOR HARDWARE FOR OTHER DOORS INDICATED.
5. KEYED CYLINDERS AS INDICATED.

B. REFERENCES: COMPLY WITH APPLICABLE REQUIREMENTS OF THE FOLLOWING STANDARDS. WHERE THESE STANDARDS CONFLICT WITH OTHER SPECIFIC REQUIREMENTS, THE MOST RESTRICTIVE SHALL GOVERN.
1. BUILDERS HARDWARE MANUFACTURING ASSOCIATION (BHMA)
2. NFPA 101 LIFE SAFETY CODE
3. NFPA 80 –FIRE DOORS AND WINDOWS
4. ANSI–A156.XX– VARIOUS PERFORMANCE STANDARDS FOR FINISH HARDWARE
5. UL10C – POSITIVE PRESSURE FIRE TEST OF DOOR ASSEMBLIES
6. ANSI–A117.1 – ACCESSIBLE AND USABLE BUILDINGS AND FACILITIES
7. DHI /ANSI A115.IG – INSTALLATION GUIDE FOR DOORS AND HARDWARE
8. ICC – INTERNATIONAL BUILDING CODE

C. INTENT OF HARDWARE GROUPS
1. SHOULD ITEMS OF HARDWARE NOT DEFINITELY SPECIFIED BE REQUIRED FOR COMPLETION OF THE WORK, FURNISH SUCH ITEMS OF TYPE AND QUALITY COMPARABLE TO ADJACENT HARDWARE AND APPROPRIATE FOR SERVICE REQUIRED.
2. WHERE ITEMS OF HARDWARE AREN'T DEFINITELY OR CORRECTLY SPECIFIED, ARE REQUIRED FOR COMPLETION OF THE WORK, A WRITTEN STATEMENT OF SUCH OMISSION, ERROR, OR OTHER DISCREPANCY TO BE SUBMITTED TO ARCHITECT, PRIOR TO DATE SPECIFIED FOR RECEIPT OF BIDS FOR CLARIFICATION BY ADDENDUM; OR, FURNISH SUCH ITEMS IN THE TYPE AND QUALITY ESTABLISHED BY THIS SPECIFICATION, AND APPROPRIATE TO THE SERVICE INTENDED.

1.2 SUBSTITUTIONS:

A. SEE SHEET T1.2

1.3 SUBMITTALS:

A. SEE SHEET T1.2

B. SPECIAL SUBMITTAL REQUIREMENTS: COMBINE SUBMITTALS OF THIS SECTION WITH SECTIONS LISTED BELOW TO ENSURE THE "DESIGN INTENT" OF THE SYSTEM/ASSEMBLY IS UNDERSTOOD AND CAN BE REVIEWED TOGETHER.

C. PRODUCT DATA: MANUFACTURER'S SPECIFICATIONS AND TECHNICAL DATA INCLUDING THE FOLLOWING:
1. DETAILED SPECIFICATION OF CONSTRUCTION AND FABRICATION.
2. MANUFACTURER'S INSTALLATION INSTRUCTIONS.
3. SUBMIT 6 COPIES OF CATALOG CUTS WITH HARDWARE SCHEDULE.

D. SHOP DRAWINGS – HARDWARE SCHEDULE: SUBMIT 6 COMPLETE REPRODUCIBLE COPY OF DETAILED HARDWARE SCHEDULE IN A VERTICAL FORMAT.
1. LIST GROUPS AND SUFFIXES IN PROPER SEQUENCE.
2. COMPLETELY DESCRIBE DOOR AND LIST ARCHITECTURAL DOOR NUMBER.
3. MANUFACTURER, PRODUCT NAME, AND CATALOG NUMBER.
4. FUNCTION, TYPE, AND STYLE.
5. SIZE AND FINISH OF EACH ITEM.
6. MOUNTING HEIGHTS.
7. EXPLANATION OF ABBREVIATIONS AND SYMBOLS USED WITHIN SCHEDULE.

E. TEMPLATES: SUBMIT TEMPLATES AND "REVIEWED HARDWARE SCHEDULE" TO DOOR AND FRAME SUPPLIER AND OTHERS AS APPLICABLE TO ENABLE PROPER AND ACCURATE SIZING AND LOCATIONS OF CUTOUTS AND REINFORCING.
1. TEMPLATES, WIRING DIAGRAMS AND "REVIEWED HARDWARE SCHEDULE" OF ELECTRICAL TERMS TO ELECTRICAL FOR COORDINATION AND VERIFICATION OF VOLTAGES AND LOCATIONS.

F. SAMPLES: (IF REQUESTED BY THE ARCHITECT)
1. 1 SAMPLE OF LEVER AND ROSE/ESCUTCHEON DESIGN, (PAIR).
2. 3 SAMPLES OF METAL FINISHES

G. CONTRACT CLOSEOUT SUBMITTALS: COMPLY WITH GENERAL NOTES INCLUDING SPECIFIC REQUIREMENTS INDICATED.
1. OPERATING AND MAINTENANCE MANUALS: SUBMIT 3 SETS CONTAINING THE FOLLOWING.
   a. COMPLETE INFORMATION IN CARE, MAINTENANCE, AND ADJUSTMENT, AND DATA ON REPAIR AND REPLACEMENT PARTS, AND INFORMATION ON PRESERVATION OF FINISHES.
   b. CATALOG PAGES FOR EACH PRODUCT.
   c. NAME, ADDRESS, AND PHONE NUMBER OF LOCAL REPRESENTATIVE FOR EACH MANUFACTURER.
   d. PARTS LIST FOR EACH PRODUCT.
2. COPY OF FINAL HARDWARE SCHEDULE, EDITED TO REFLECT, "AS INSTALLED".
3. COPY OF FINAL KEYING SCHEDULE
4. ONE SET OF SPECIAL TOOLS REQUIRED FOR MAINTENANCE AND ADJUSTMENT OF HARDWARE, INCLUDING CHANGING OF CYLINDERS.

1.4 QUALITY ASSURANCE

A. COMPLY WITH GENERAL NOTES.
1. STATEMENT OF QUALIFICATION FOR DISTRIBUTOR AND INSTALLERS.
2. STATEMENT OF COMPLIANCE WITH REGULATORY REQUIREMENTS AND SINGLE SOURCE RESPONSIBILITY.
3. DISTRIBUTOR'S QUALIFICATIONS: FIRM WITH 3 YEARS EXPERIENCE IN THE DISTRIBUTION OF COMMERCIAL HARDWARE.
   a. DISTRIBUTOR TO EMPLOY FULL TIME ARCHITECTURAL HARDWARE CONSULTANTS (AHC) FOR THE PURPOSE OF SCHEDULING AND COORDINATING HARDWARE AND ESTABLISHING KEYING SCHEDULE.
   b. HARDWARE SCHEDULE SHALL BE PREPARED AND SIGNED BY AN AHC.
4. INSTALLER'S QUALIFICATIONS: FIRM WITH 3 YEARS EXPERIENCED IN INSTALLATION OF SIMILAR HARDWARE TO THAT REQUIRED FOR THIS PROJECT, INCLUDING SPECIFIC REQUIREMENTS INDICATED.
5. REGULATORY LABEL REQUIREMENTS: PROVIDE TESTING AGENCY LABEL OR STAMP ON HARDWARE FOR LABELED OPENINGS.
   a. PROVIDE UL LISTED HARDWARE FOR LABELED AND 20 MINUTE OPENINGS IN CONFORMANCE WITH REQUIREMENTS FOR CLASS OF OPENING SCHEDULED.
   b. UNDERWRITERS LABORATORIES REQUIREMENTS HAVE PRECEDENCE OVER THIS SPECIFICATION WHERE CONFLICT EXISTS.
6. SINGLE SOURCE RESPONSIBILITY: EXCEPT WHERE SPECIFIED IN HARDWARE SCHEDULE, FURNISH PRODUCTS OF ONLY ONE MANUFACTURER FOR EACH TYPE OF HARDWARE.

B. REVIEW PROJECT FOR EXTENT OF FINISH HARDWARE REQUIRED TO COMPLETE THE WORK. WHERE THERE IS A CONFLICT BETWEEN THESE SPECIFICATIONS AND THE EXISTING HARDWARE, NOTIFY THE ARCHITECT IN WRITING AND FURNISH HARDWARE IN COMPLIANCE WITH THE SPECIFICATION UNLESS OTHERWISE DIRECTED IN WRITING BY THE ARCHITECT.

1.5 DELIVERY, STORAGE, AND HANDLING

A. PACKING AND SHIPPING: COMPLY WITH DIVISION 1.
1. DELIVER PRODUCTS IN ORIGINAL UNOPENED PACKAGING WITH LEGIBLE MANUFACTURER'S IDENTIFICATION.
2. PACKAGE HARDWARE TO PREVENT DAMAGE DURING TRANSIT AND STORAGE.
3. MARK HARDWARE TO CORRESPOND WITH "REVIEWED HARDWARE SCHEDULE".
4. DELIVER HARDWARE TO DOOR AND FRAME MANUFACTURER UPON REQUEST.

B. STORAGE AND PROTECTION: COMPLY WITH MANUFACTURER'S RECOMMENDATIONS.

1.6 PROJECT CONDITIONS:

A. COORDINATE HARDWARE WITH OTHER WORK. FURNISH HARDWARE ITEMS OF PROPER DESIGN FOR USE ON DOORS AND FRAMES OF THE THICKNESS, PROFILE, SWING, SECURITY AND SIMILAR REQUIREMENTS INDICATED, AS NECESSARY FOR THE PROPER INSTALLATION AND FUNCTION, REGARDLESS OF OMISSIONS OR CONFLICTS IN THE INFORMATION ON THE CONTRACT DOCUMENTS.

B. REVIEW SHOP DRAWINGS FOR DOORS AND ENTRANCES TO CONFIRM THAT ADEQUATE PROVISIONS WILL BE MADE FOR THE PROPER INSTALLATION OF HARDWARE.

1.7 WARRANTY:

A. REFER TO CONDITIONS OF THE CONTRACT

B. MANUFACTURER'S WARRANTY:
1. CLOSERS: TEN YEARS
2. EXIT DEVICES: FIVE YEARS
3. LOCKSETS & CYLINDERS: THREE YEARS
4. ALL OTHER HARDWARE: TWO YEARS.

1.8 OWNER'S INSTRUCTION:

A. INSTRUCT OWNER'S PERSONNEL IN OPERATION AND MAINTENANCE OF HARDWARE UNITS.

1.9 MAINTENANCE:

A. EXTRA SERVICE MATERIALS: DELIVER TO OWNER EXTRA MATERIALS FROM SAME PRODUCTION RUN AS PRODUCTS INSTALLED. PACKAGE PRODUCTS WITH PROTECTIVE COVERING AND IDENTIFY WITH DESCRIPTIVE LABELS. COMPLY WITH DIVISION 1 CLOSEOUT SUBMITTALS SECTION.
1. SPECIAL TOOLS: PROVIDE SPECIAL WRENCHES AND TOOLS APPLICABLE TO EACH DIFFERENT OR SPECIAL HARDWARE COMPONENT.
2. MAINTENANCE TOOLS: PROVIDE MAINTENANCE TOOLS AND ACCESSORIES SUPPLIED BY HARDWARE COMPONENT MANUFACTURER.
3. DELIVERY, STORAGE AND PROTECTION: COMPLY WITH OWNER'S REQUIREMENTS FOR DELIVERY, STORAGE AND PROTECTION OF EXTRA SERVICE MATERIALS.

B. MAINTENANCE SERVICE: SUBMIT FOR OWNER'S CONSIDERATION MAINTENANCE SERVICE AGREEMENT FOR ELECTRONIC PRODUCTS INSTALLED.

PART 2 – PRODUCTS

2.1 MANUFACTURERS:

A. THE FOLLOWING MANUFACTURERS ARE APPROVED SUBJECT TO COMPLIANCE WITH REQUIREMENTS OF THE CONTRACT DOCUMENTS. APPROVAL OF MANUFACTURERS OTHER THAN THOSE LISTED SHALL BE IN ACCORDANCE WITH DIVISION 1.

ITEM:	MANUFACTURER:	APPROVED:
HINGES	STANLEY	BOMMER, MCKINNEY
CONTINUOUS HINGES	STANLEY	SELECT, ABH
LOCKSETS	BEST (COORDINATE WITH OWNER)	
CYLINDERS	BEST (COORDINATE WITH OWNER)	
CLOSERS	STANLEY D–4550	DORMA 8900, NORTON 7500
PUSH/PULL BARS	TRIMCO	BURNS, ROCKWOOD
PROTECTION PLATES	TRIMCO	BURNS, ROCKWOOD
OVERHEAD STOPS	ABH	RIXSON, GLYNN JOHNSON
DOOR STOPS	TRIMCO	BURNS, ROCKWOOD
THRESHOLD & GASKETING	NATIONAL GUARD	REESE, K.N. CROWDER

2.2 MATERIALS:

A. HINGES: SHALL BE FIVE KNUCKLE BALL BEARING HINGES
1. TEMPLATE SCREW HOLE LOCATIONS
2. BEARINGS ARE TO BE FULLY HARDENED.
3. BEARING SHELL IS TO BE CONSISTENT SHAPE WITH BARREL.
4. MINIMUM OF 2 PERMANENTLY LUBRICATED NON–DETACHABLE BEARINGS ON STANDARD WEIGHT HINGE AND 4 PERMANENTLY LUBRICATED BEARING ON HEAVY WEIGHT HINGES.
5. EQUIP WITH EASILY SEATED, NON–RISING PINS.
6. NON REMOVABLE PIN SCREWS SHALL BE SLOTTED STAINLESS STEEL SCREWS.
7. HINGES SHALL BE FULL POLISHED, FRONT, BACK AND BARREL.
8. HINGE PIN IS TO BE FULLY PLATED.
9. BEARING ASSEMBLY IS TO BE INSTALLED AFTER PLATING.
10. SUFFICIENT SIZE TO ALLOW 180–DEGREE SWING OF DOOR
11. FURNISH FIVE KNUCKLES WITH FLUSH BALL BEARINGS
12. PROVIDE HINGE TYPE AS LISTED IN SCHEDULE.
13. FURNISH 3 HINGES PER LEAF TO 7 FOOT 6 INCH HEIGHT. ADD ONE FOR EACH ADDITIONAL 30 INCHES IN HEIGHT OR FRACTION THEREOF.
14. TESTED AND APPROVED BY BHMA FOR ALL APPLICABLE ANSI STANDARDS FOR TYPE, SIZE, FUNCTION AND FINISH
15. UL10C LISTED FOR FIRE RATED DOORS.

B. GEARED CONTINUOUS HINGES:
1. TESTED AND APPROVED BY BHMA FOR ANSI A156.26–1996 GRADE 1
2. ANTI–SPINNING THROUGH FASTENER
3. UL10C LISTED FOR 3 HOUR FIRE RATING
4. NON–HANDED
5. LIFETIME WARRANTY
6. PROVIDE FIRE PINS FOR 3–HOUR FIRE RATINGS
7. SUFFICIENT SIZE TO PERMIT DOOR TO SWING 180 DEGREES
8. PROVIDE THE NECESSARY CYLINDER HOUSINGS, COLLARS, RINGS & SPRINGS AS RECOMMENDED BY THE MANUFACTURER FOR PROPER INSTALLATION.
9. PROVIDE THE PROPER CYLINDER CAMS OR TAIL PIECE AS REQUIRED TO OPERATE ALL LOCKSETS AND OTHER KEYED HARDWARE ITEMS LISTED IN THE HARDWARE SETS.
10. COORDINATE AND PROVIDE AS REQUIRED FOR RELATED SECTIONS.

C. DOOR CLOSERS SHALL:
1. TESTED AND APPROVED BY BHMA FOR ANSI 156.4, GRADE 1
2. UL10C CERTIFIED
3. PROVIDE 9001–QUALITY MANAGEMENT AND 14001–ENVIRONMENTAL MANAGEMENT.
4. CLOSER SHALL HAVE EXTRA–DUTY ARMS AND KNUCKLES
5. CONFORM TO ANSI 117.1
6. MAXIMUM 2 7/16 INCH CASE PROJECTION WITH NON–FERROUS COVER
7. SEPARATE ADJUSTING VALVES FOR CLOSING AND LATCHING SPEED, AND BACKCHECK
8. PROVIDE ADAPTER PLATES, SHIM SPACERS AND BLADE STOP SPACERS AS REQUIRED BY FRAME AND DOOR CONDITIONS
9. FULL RACK AND PINION TYPE CLOSER WITH 1½" MINIMUM BORE
10. MOUNT CLOSERS ON NON–PUBLIC SIDE OF DOOR, UNLESS OTHERWISE NOTED IN SPECIFICATION
11. CLOSERS SHALL BE NON–HANDED, NON–SIZED AND MULTI–SIZED.

D. DOOR STOPS: PROVIDE A DOME FLOOR OR WALL STOP FOR EVERY OPENING AS LISTED IN THE HARDWARE SETS.
1. WALL STOP AND FLOOR STOP SHALL BE WROUGHT BRONZE, BRASS OR STAINLESS STEEL.
2. PROVIDE FASTENER SUITABLE FOR WALL CONSTRUCTION.
3. COORDINATE REINFORCEMENT OF WALLS WHERE WALL STOP IS SPECIFIED.
4. PROVIDE DOME STOPS WHERE WALL STOPS ARE NOT PRACTICAL. PROVIDE SPACERS OR CARPET RISER FOR FLOOR CONDITIONS ENCOUNTERED

E. OVER HEAD STOPS: PROVIDE A SURFACE MOUNTED OR CONCEALED OVERHEAD WHEN A FLOOR OR WALL STOP CANNOT BE USED OR WHEN LISTED IN THE HARDWARE SET.
1. CONCEALED OVERHEAD STOPS SHALL BE HEAVY DUTY BRONZE OR STAINLESS STEEL.
2. SURFACE OVERHEAD STOPS SHALL BE HEAVY DUTY BRONZE OR STAINLESS STEEL.

F. PUSH PULL BARS: PROVIDE ANSI J504, .1" DIA. PULL AND PUSH BAR MODEL AND SERIES AS LISTED IN HARDWARE SET. PROVIDE PROPER FASTENERS FOR DOOR CONSTRUCTION.

G. KICKPLATES: PROVIDE WITH FOUR BEVELED EDGES ANSI J102, 10 INCHES HIGH BY WIDTH LESS 2 INCHES ON SINGLE DOORS AND 1 INCH ON PAIRS OF DOORS. FURNISH OVAL–HEAD COUNTERSUNK SCREWS TO MATCH FINISH.

H. MOP PLATES: PROVIDE WITH FOUR BEVELED EDGES ANSI J103, 4 INCHES HIGH BY WIDTH LESS 1 INCH ON SINGLE DOORS AND 1 INCH ON PAIRS OF DOORS. FURNISH OVAL–HEAD COUNTERSUNK SCREWS TO MATCH FINISH.

I. SEALS: ALL SEALS SHALL BE FINISHED TO MATCH ADJACENT FRAME COLOR. SEALS SHALL BE FURNISHED AS LISTED IN SCHEDULE. MATERIAL SHALL BE UL LISTED FOR LABELED OPENINGS.

J. WEATHERSTRIPPING: PROVIDE AT HEAD AND JAMBS ONLY THOSE UNITS WHERE RESILIENT OR FLEXIBLE SEAL STRIP IS EASILY REPLACEABLE. WHERE BAR–TYPE WEATHERSTRIP IS USED WITH PARALLEL ARM MOUNTED CLOSERS INSTALL WEATHERSTRIP FIRST.
1. WEATHERSTRIP SHALL BE RESILIENT SEAL OF (NEOPRENE, POLYURETHANE, VINYL, PILE, NYLON BRUSH, SILICONE)
2. UL10C POSITIVE PRESSURE RATED SEAL SET WHEN REQUIRED.

K. DOOR BOTTOMS/SWEEPS: SURFACE MOUNTED OR CONCEALED DOOR BOTTOM WHERE LISTED IN THE HARDWARE SETS.
1. DOOR SEAL SHALL BE RESILIENT SEAL OF (NEOPRENE, POLYURETHANE, NYLON BRUSH, SILICONE)
2. UL10C POSITIVE PRESSURE RATED SEAL SET WHEN REQUIRED.

L. THRESHOLDS: THRESHOLDS SHALL BE ALUMINUM BEVELED TYPE WITH MAXIMUM HEIGHT OF ½" FOR CONFORMANCE WITH ADA REQUIREMENTS. FURNISH AS SPECIFIED AND PER DETAILS. PROVIDE FASTENERS AND SCREWS SUITABLE FOR FLOOR CONDITIONS.

M. SILENCERS: FURNISH SILENCERS ON ALL INTERIOR FRAMES, 3 FOR SINGLE DOORS, 2 FOR PAIRS. OMIT WHERE ANY TYPE OF SEALS OCCUR.

2.3 FINISH:

A. DESIGNATIONS USED IN SCHEDULE OF FINISH HARDWARE – 3.05, AND ELSEWHERE TO INDICATE HARDWARE FINISHES ARE THOSE LISTED IN ANSI/BHMA A156.18 INCLUDING COORDINATION WITH TRADITIONAL U.S. FINISHES SHOWN BY CERTAIN MANUFACTURERS FOR THEIR PRODUCTS

B. POWDER COAT DOOR CLOSERS TO MATCH OTHER HARDWARE, UNLESS OTHERWISE NOTED.

C. ALUMINUM ITEMS SHALL BE FINISHED TO MATCH PREDOMINANT ADJACENT MATERIAL. SEALS TO COORDINATE WITH FRAME COLOR.

2.4 KEYS AND KEYING:

A. PROVIDE KEYED BRASS CONSTRUCTION CORES AND KEYS DURING THE CONSTRUCTION PERIOD. CONSTRUCTION CONTROL AND OPERATING KEYS AND CORE SHALL NOT BE PART OF THE OWNER'S PERMANENT KEYING SYSTEM OR FURNISHED IN THE SAME KEYWAY (OR KEY SECTION) AS THE OWNER'S PERMANENT KEYING SYSTEM. PERMANENT CORES AND KEYS (PREPARED ACCORDING TO THE ACCEPTED KEYING SCHEDULE) WILL BE FURNISHED TO THE OWNER.

B. CYLINDERS, REMOVABLE AND INTERCHANGEABLE CORE SYSTEM: COORDINATE WITH OWNER FOR KEYING STANDARDS.

C. PERMANENT KEYS AND CORES: STAMPED WITH THE APPLICABLE KEY MARK FOR IDENTIFICATION. THESE VISUAL KEY CONTROL MARKS OR CODES WILL NOT INCLUDE THE ACTUAL KEY CUTS. PERMANENT KEYS WILL ALSO BE STAMPED "DO NOT DUPLICATE."

D. THE OWNER, OR THE OWNER'S AGENT, WILL INSTALL PERMANENT CORES AND RETURN THE CONSTRUCTION CORES TO THE HARDWARE SUPPLIER. CONSTRUCTION CORES AND KEYS REMAIN THE PROPERTY OF THE HARDWARE SUPPLIER.

E. KEYING SCHEDULE: ARRANGE FOR A KEYING MEETING, AND PROGRAMMING MEETING WITH ARCHITECT OWNER AND HARDWARE SUPPLIER, AND OTHER INVOLVED PARTIES TO ENSURE LOCKSETS AND LOCKING HARDWARE, ARE FUNCTIONALLY CORRECT AND KEYING AND PROGRAMMING COMPLIES WITH PROJECT REQUIREMENTS. FURNISH 3 TYPED COPIES OF KEYING AND PROGRAMMING SCHEDULE TO ARCHITECT.

PART 3 – EXECUTION

3.1 EXAMINATION

A. VERIFICATION OF CONDITIONS: EXAMINE DOORS, FRAMES, RELATED ITEMS AND CONDITIONS UNDER WHICH WORK IS TO BE PERFORMED AND IDENTIFY CONDITIONS DETRIMENTAL TO PROPER AND OR TIMELY COMPLETION.
1. DO NOT PROCEED UNTIL UNSATISFACTORY CONDITIONS HAVE BEEN CORRECTED.

3.2 HARDWARE LOCATIONS:

A. MOUNT HARDWARE UNITS AT HEIGHTS INDICATED IN THE FOLLOWING PUBLICATIONS EXCEPT AS SPECIFICALLY INDICATED OR REQUIRED TO COMPLY WITH THE GOVERNING REGULATIONS.
1. RECOMMENDED LOCATIONS FOR BUILDER'S HARDWARE FOR STANDARD STEEL DOORS AND FRAMES, BY THE DOOR AND HARDWARE INSTITUTE (DHI).
2. RECOMMENDED LOCATIONS FOR ARCHITECTURAL HARDWARE FOR FLUSH WOOD DOORS (DHI).
3. WDMA INDUSTRY STANDARD I.S.–1A–04, INDUSTRY STANDARD FOR ARCHITECTURAL WOOD FLUSH DOORS.

3.3 INSTALLATION:

A. INSTALL EACH HARDWARE ITEM PER MANUFACTURER'S INSTRUCTIONS AND RECOMMENDATIONS. DO NOT INSTALL SURFACE MOUNTED ITEMS UNTIL FINISHES HAVE BEEN COMPLETED ON THE SUBSTRATE. SET UNITS LEVEL, PLUMB AND TRUE TO LINE AND LOCATION. ADJUST AND REINFORCE THE ATTACHMENT SUBSTRATE AS NECESSARY FOR PROPER INSTALLATION AND OPERATION.

B. CONFORM TO LOCAL GOVERNING AGENCY SECURITY ORDINANCE.

C. INSTALL CONFORMING TO ICC/ANSI A117.1 ACCESSIBLE AND USABLE BUILDING AND FACILITIES.
1. ADJUST DOOR CLOSER SWEEP PERIODS SO THAT FROM THE OPEN POSITION OF 70 DEGREES, THE DOOR WILL TAKE AT LEAST 3 SECONDS TO MOVE TO A POINT 3 INCHES FROM THE LATCH, MEASURED TO THE LANDING SIDE OF THE DOOR.

D. INSTALLED HARDWARE USING THE MANUFACTURERS FASTENERS PROVIDED. DRILL AND TAP ALL SCREW HOLES LOCATED IN METALLIC MATERIALS. DO NOT USE "RIV–NUTS" OR SIMILAR PRODUCTS.

3.4 FIELD QUALITY CONTROL AND FINAL ADJUSTMENT

A. CONTRACTOR/INSTALLERS, FIELD SERVICES: AFTER INSTALLATION IS COMPLETE, CONTRACTOR SHALL INSPECT THE COMPLETED DOOR OPENINGS ON SITE TO VERIFY INSTALLATION OF HARDWARE IS COMPLETE AND PROPERLY ADJUSTED, IN ACCORDANCE WITH BOTH THE CONTRACT DOCUMENTS AND FINAL SHOP DRAWINGS.
1. CHECK AND ADJUST CLOSERS TO ENSURE PROPER OPERATION.
2. CHECK LATCHSET, LOCKSET, AND EXIT DEVICES ARE PROPERLY INSTALLED AND ADJUSTED TO ENSURE PROPER OPERATION.
   a. VERIFY LEVERS ARE FREE FROM BINDING.
   b. ENSURE LATCHBOLTS AND DEAD BOLTS ARE ENGAGED INTO STRIKE AND HARDWARE IS FUNCTIONING.
3. REPORT FINDINGS, IN WRITING, TO ARCHITECT INDICATING THAT ALL HARDWARE IS INSTALLED AND FUNCTIONING PROPERLY. INCLUDE RECOMMENDATIONS OUTLINING CORRECTIVE ACTIONS FOR IMPROPERLY FUNCTIONING HARDWARE IF REQUIRED.

Cuschieri Horton Architects
1475 S. Bascom Ave. Suite 204
Campbell, California 95008
408.371.8200 Fx 408.371.8201

LICENSED ARCHITECT
MICHAEL ANTHONY CUSCHIERI
C–34957
JAN 31 2021
RENEWAL DATE
STATE OF CALIFORNIA

DOOR HARDWARE SPECIFICATIONS
ENGINEERING BUILDING

TOWN OF LOS GATOS
ENGINEERING BUILDING TI ~~AND STORAGE BUILDING~~
41 MILES AVENUE,
LOS GATOS, CA 95030

REVISIONS

NO.	ITEM	DATE

PERMIT #:

SUBMITTAL:
CITY SUBMITTAL SET

DRAWN BY: SG
CHECKED BY: RB
JOB NO: 1826
DATE: 12/04/19

SHEET NO.
A5.1

8/11/2020 9:50 AM

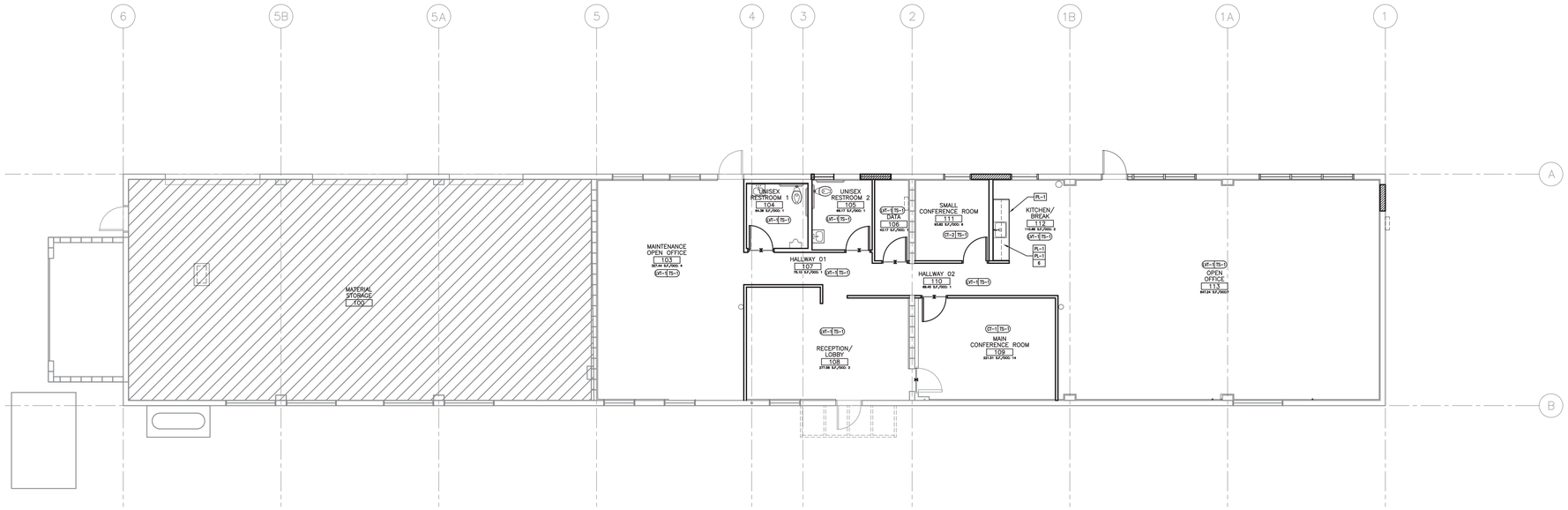

1 FINISH PLAN
ENGINEERING BUILDING

1/8"=1'-0" 0 1' 2' 4' 8'

NORTH

GENERAL NOTES

A. ALL GYP. BD CEILINGS SHALL PAINTED 'P1' U.N.O., SEE REFLECTED CEILING PLAN.

B. ALL 2'X4' T-BAR CEILINGS SHALL HAVE TILE TYPE AC-1 U.N.O., SEE REFLECTED CEILING PLAN.

C. ALL WALLS SHALL BE PAINTED 'P-1' U.N.O.

D. ALL EXPOXED CASEWORK VERTICAL SURFACES SHALL BE PLASTIC LAMINATE TYPE PL-1, U.N.O. AT CARPET TO RESILIENT TILE OR SHEET FLOORING TRANSITION, SEE DETAIL 10/A9.2

E. REFER TO CASEWORK DETAILS, ELEVATIONS, AND SECTIONS FOR MORE INFORMATION ON CASEWORK.

LEGEND

PAINT
P1 — PAINT COLOR
EXTENT OF PAINT COLOR

PAINT ABOVE WAINSCOT
P1 HP-1 — WAINSCOT TYPE AND FINISH
PAINT COLOR ABOVE WAINSCOT
54" — HT. OF TOP OF WAINSCOT A.F.F.
EXTENT OF PAINT/WAINSCOT OR ALL WALLS IF OMITTED

FLOORING AND WALL BASE
SV-1 TS-1 — WALL BASE TYPE AND FINISH
FLOORING TYPE AND FINISH

WALL OR TOILET ACCESSORIES
TA-1 — TOILET OR WALL ACCESSORY TYPE AND FINISH

CASEWORK/MILLWORK
PL-1 — CASEWORK FINISH TYPE AND COLOR

COUNTERTOP AND BACKSPLASH
PL-1 — COUNTERTOP TYPE AND FINISH
PL-1 — BACKSPLASH TYPE AND FINISH
6 — BACKSPLASH HEIGHT IN INCHES OR 'F' = FULL HEIGHT TO UPPER CABINET, WALL CAP, OR CEILING ABOVE; '–' = NO BACKSPLASH

FLOORING TRANSITIONS
FLOOR FINISH TRANSITION, CENTER AT DOORS, U.N.O.

COLOR AND MATERIAL SCHEDULE

NOTE: ITEMS SHOWN IN THIS SCHEDULE ARE TYPICAL AND MAY NOT BE USED IN THIS SET OF DOCUMENTS. REFER TO FINISH PLAN AND REFLECTED CEILING PLAN FOR SPECIFIC LOCATIONS OF EACH MATERIAL OR FINISH.

MATERIAL OR FINISH	MARK	ITEM			REMARKS
		MANUFACTURER	STYLE NAME / CAT. NO.	COLOR NAME / NO.	
	P1	SHERWIN WILLIAMS	FIELD PAINT	SNOWBOUND / #SW7757	WALLS SHALL BE EGGSHELL. DOORS & FRAMES & TOILET ROOMS SHALL BE SEMI-GLOSS SPRAY APPLIED (NO BRUSHING). COORDINATE W/OWNER FOR FINAL COLOR FINISH
INTERIOR PAINT PLASTIC LAMINATE	PL-1	WILSON ART	CASEWORK & EXPOSED INTERIORS	FUSION MAPLE / #7909-60	COORDINATE W/OWNER FOR FINAL COLOR FINISH
SOLID SURFACE COUNTER	SS-1	LG HI-MACS SOLID SURFACE	COUNTERTOPS	CANOSSA / #M202	–
	–	–	–	–	–
ACOUSTIC CEILING TILE	AC-1	ARMSTRONG	CORTEGA SQUARE EDGE LAY-IN	WHITE / #769 / 2'X4'	GRID: PRELUDE XL 15/16" OR MATCH EXISTING
	–	–	–	–	
WALL BASE	TS-1	BURKE MERCER	RESILIENT BASE 4" COVE BASE	NOUGAT / #150	COORDINATE WITH OWNER FOR FINAL COLOR FINISH
	PT-1	–	–	–	–
LUXURY VINYL TILE	LVT-1	SHAW CONTRACT	SOLITUDE	FRENCH GREY /48599	–
	–	–	–	–	–
CARPET TILE	CT-1	SHAW CONTRACT	SUITED	BAMBOO / 79375	–
	CT-2	SHAW CONTRACT	SUITED	INDIGO / 70496	–
CONCRETE FLOOR FINISH	CF-1	–	–	–	–
SHEET WALL PROTECTION	FRP-1	IPC	0.040" THICK	TAUPE /113	54" HIGH. COORDINATE FINAL COLOR FINISH WITH OWNER.

WALL AND TOILET ACCESSORIES SCHEDULE

NOTE: ITEMS SHOWN IN THIS SCHEDULE ARE TYPICAL AND MAY NOT BE USED IN THIS SET OF DOCUMENTS. REFER TO FLOOR PLAN, RCP AND INTERIOR ELEVATIONS FOR SPECIFIC LOCATIONS OF ALL EQUIPMENT OR ACCESSORIES. SEE SHEET A0.0 FOR TYP. MOUNTING HEIGHTS.

INSTALL	MARK	DESCRIPTION	MANUFACTURER	STYLE/CA. #	REMARKS
CFCI	SD-1	FOAM SOAP DISPENSER	BOBRICK	B-4112	S.S. SATIN FINISH
CFCI	PTW-1	RECESSED CONVERTIBLE PAPER TOWEL DISPENSER / WASTE RECEPTACLE	BOBRICK	B-3944	S.S. SATIN FINISH
CFCI	TP-2	SEMI-RECESSED MULTI-ROLL TOILET PAPER DISPENSER	BOBRICK	B-4388	S.S. SATIN FINISH
CFCI	SR-1	SANITARY RECEPTACLE – SURFACE MOUNT	BOBRICK	B-254	S.S SATIN-FINISH
CFCI	MR-1	MIRROR, STAINLESS STEEL FRAME, 24"X36"	BOBRICK	B-165	
CFCI	GB-1	GRAB BAR, 1 1/4" DIA. STAINLESS STEEL, W/ SNAP FLANGE – 36" LONG	BOBRICK	B-6806	SATIN FINISH
CFCI	GB-2	GRAB BAR, 1 1/2" DIA. STAINLESS STEEL, W/ SNAP FLANGE – 42" LONG	BOBRICK	B-6806	SATIN FINISH
CFCI	TSC-1	TOILET SEAT COVER DISPENSER	BOBRICK	B-221	SATIN FINISH
CFCI	CH-1	COAT HANGER	BOBRICK	B-212	SATIN FINISH

WALL & TOILET ACCESSORIES SCHEDULE LEGEND

OFOI	OWNER FURNISHED/OWNER INSTALLED	CFCI	CONTRACTOR FURNISHED/CONTRACTOR INSTALLED	VFVI	VENDOR FURNISHED/VENDOR INSTALLED
OFCI	OWNER FURNISHED/CONTRACTOR INSTALLED	E/C	EXISTING/CONTRACTOR INSTALLED	VFCI	VENDOR FURNISHED/CONTRACTOR INSTALLED
OFVI	OWNER FURNISHED/VENDOR INSTALLED	E/O	EXISTING/OWNER INSTALLED		

NOTE: REFER TO FLOOR PLAN, RCP AND INTERIOR ELEVATIONS FOR SPECIFIC LOCATIONS OF ALL EQUIPMENT OR ACCESSORIES.
(ABBREVIATIONS ARE TYP., NOT ALL MAY BE USED)

KEYPLAN

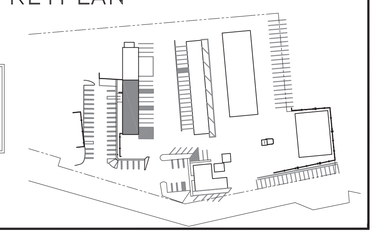

Cuschieri Horton Architects
1475 S. Bascom Ave. Suite 204
Campbell, California 95008
408.371.8200 Fx 408.371.8201

LICENSED ARCHITECT
RICHARD ANTHONY BOSCO
C-34957
JAN 31 2021
RENEWAL DATE
STATE OF CALIFORNIA

FINISH PLAN–ENG. BLDG., COLOR/MAT SCHED., WALL & TOILET ACC. SCHED.

TOWN OF LOS GATOS
ENGINEERING BUILDING TI ~~AND STORAGE BUILDING~~
41 MILES AVENUE,
LOS GATOS, CA 95030

REVISIONS

NO.	ITEM	DATE

PERMIT #:

SUBMITTAL:
CITY SUBMITTAL SET

DRAWN BY: DN
CHECKED BY: RB
JOB NO: 1826
DATE: 12/04/19

SHEET NO.
A5.2

8/11/2020 9:51 AM

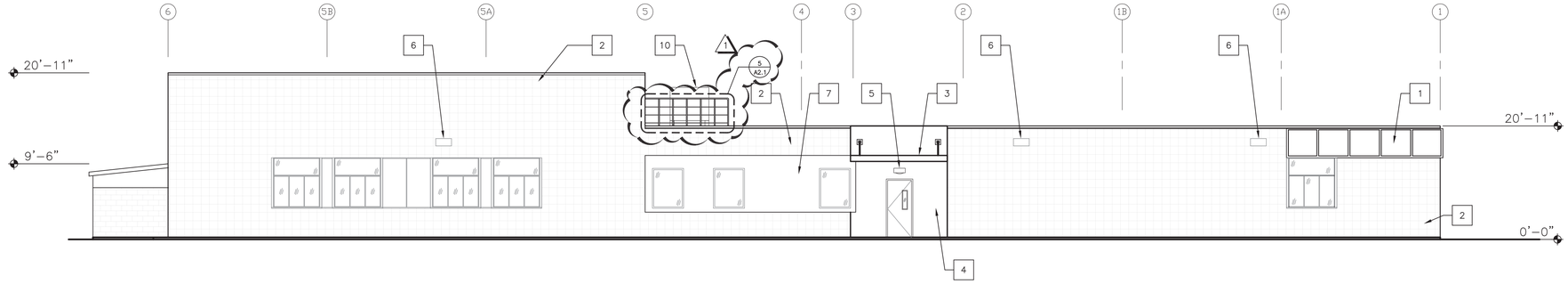

① NORTHEAST
ENGINEERING BUILDING

1/8"=1'-0"

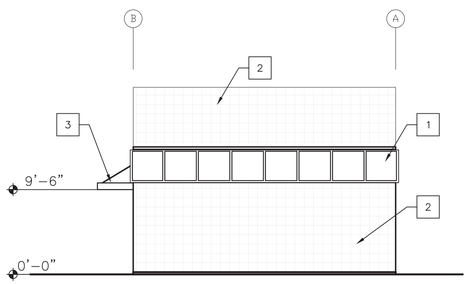

② SOUTHEAST
ENGINEERING BUILDING

1/8"=1'-0"

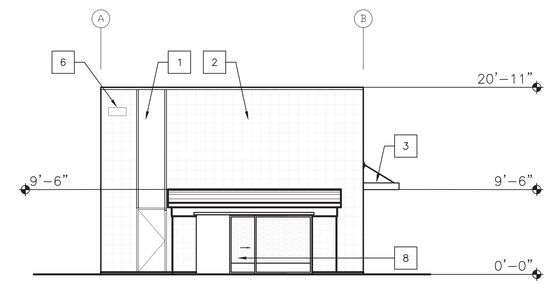

③ NORTHWEST
ENGINEERING BUILDING

1/8"=1'-0"

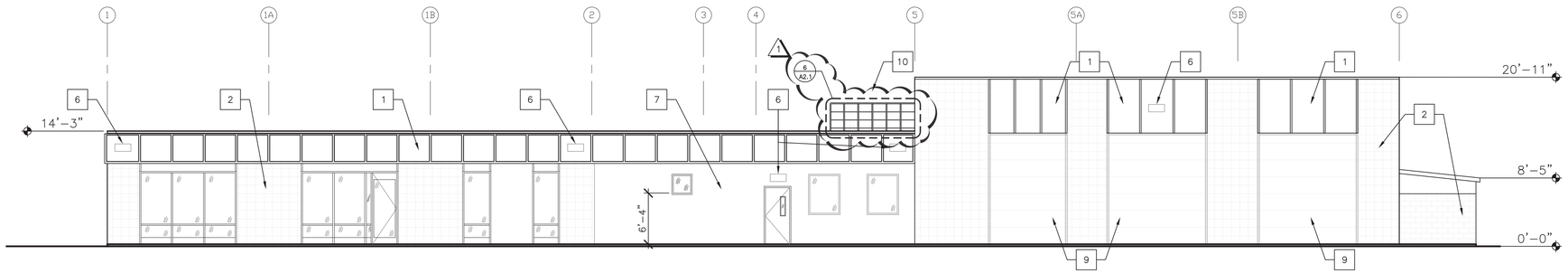

④ SOUTHWEST
ENGINEERING BUILDING

1/8"=1'-0"

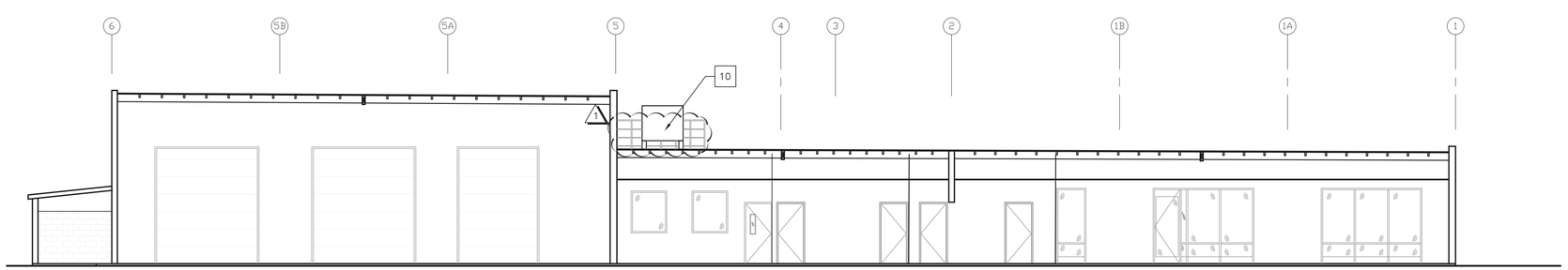

④ SECTION
ENGINEERING BUILDING

1/8"=1'-0"

SPECIFIC NOTES

1. PATCH, REPAIR & PAINT, EXISTING PLYWOOD
2. (E) CONCRETE BLOCK FINISH.
3. ROOF CANOPY, SEE STRUCTURAL DRAWINGS FOR MORE INFORMATION. SEE DETAIL 6,9&12 OF SHEET A9.0
4. PAINTED, PLASTER FINISH OVER (E) CONCRETE BLOCKS
5. EXTERIOR WALL MOUNTED LIGHT. SEE ELECTRICAL DRAWINGS FOR MORE INFORMATION.
6. (E) EXTERIOR WALL MOUNTED LIGHT TO REMAIN.
7. PAINTED (E) PLASTER FINISH.
8. (E) SLIDING CHAIN LINK GATES.
9. (E) ROLL-UP DOOR.
10. (N) HVAC EQUIPMENT ON ROOF. SEE MECHANICAL DWGS. FOR MORE INFO.
11. (E) HVAC UNIT TO REMAIN

Cuschieri Horton Architects
1475 S. Bascom Ave. Suite 204
Campbell, California 95008
408.371.8200 Fx 408.371.8201

LICENSED ARCHITECT
PROFESSIONAL ENGINEER
C-34957
JAN 31 2021
RENEWAL DATE
STATE OF CALIFORNIA

EXTERIOR ELEVATIONS & SECTION
ENGINEERING BUILDING

TOWN OF LOS GATOS
ENGINEERING BUILDING TI ~~AND STORAGE BUILDING~~
41 MILES AVENUE,
LOS GATOS, CA 95030

REVISIONS

NO.	ITEM	DATE
1	RESPONSE TO FIRST REVIEW COMMENTS	07/17/20

PERMIT #:

SUBMITTAL:
CITY SUBMITTAL SET

DRAWN BY: SG
CHECKED BY: RB

JOB NO: 1826
DATE: 12/04/19

SHEET NO.
A8.0

8/11/2020 9:52 AM

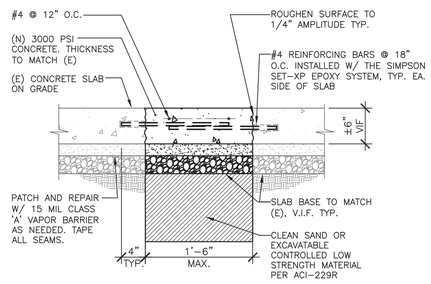

10 CONC. SLAB PATCH

N.T.S.

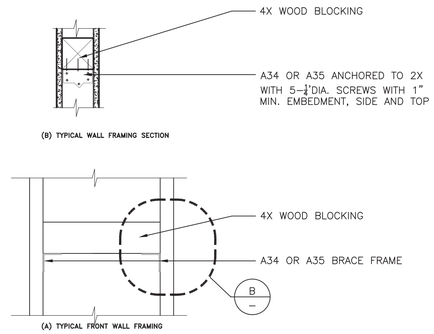

7 TYP. WALL WOOD BACKING

1 1/2"=1'-0"

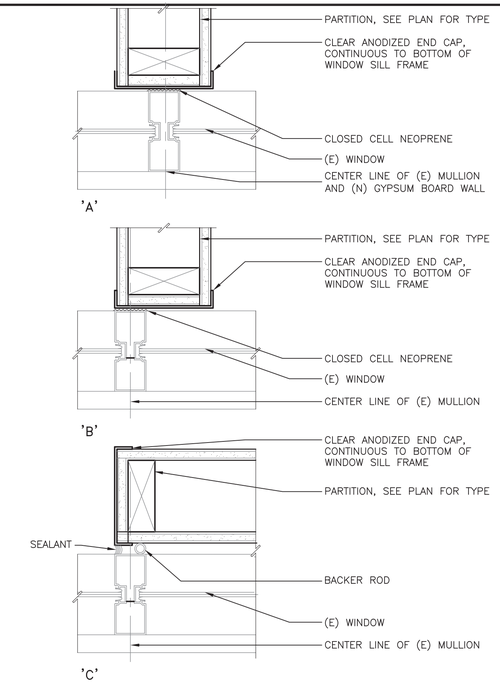

5 PARTITION @ (E) MULLION

3"=1'-0"

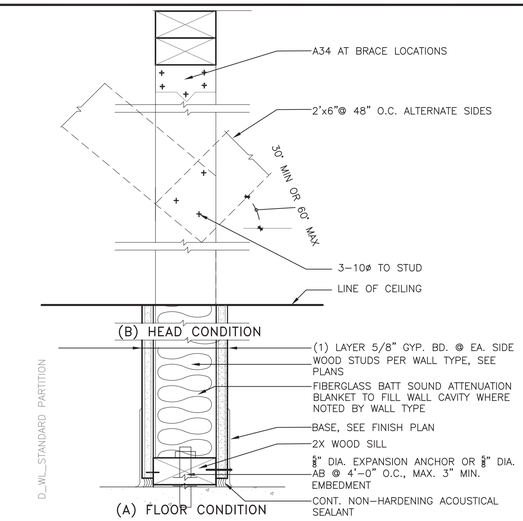

1 STANDARD PARTITION

NON-RATED 3"=1'-0"

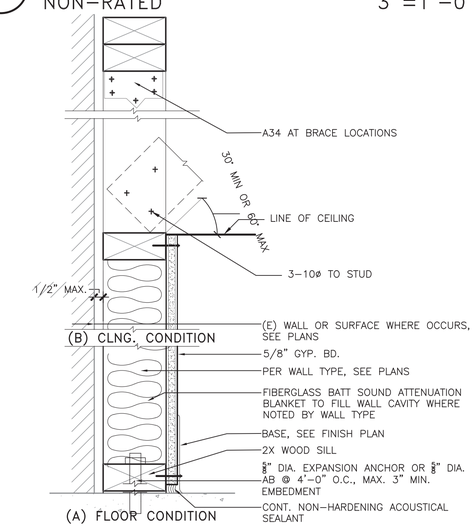

2 WALL FURRING

3"=1'-0"

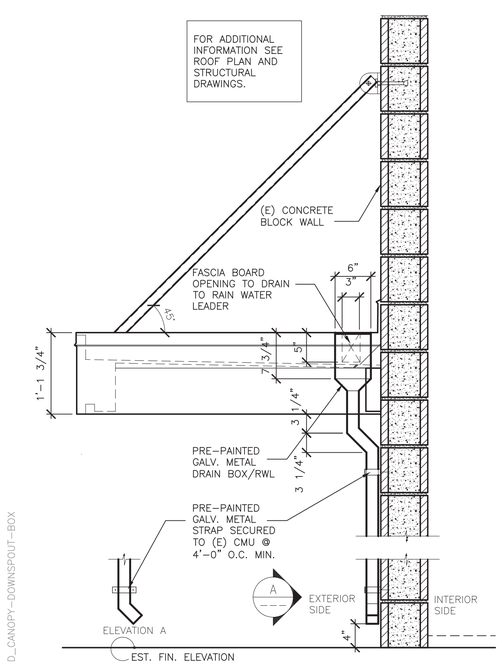

12 ENTRANCE CANOPY

SIDE ELEVATION 1"=1'-0"

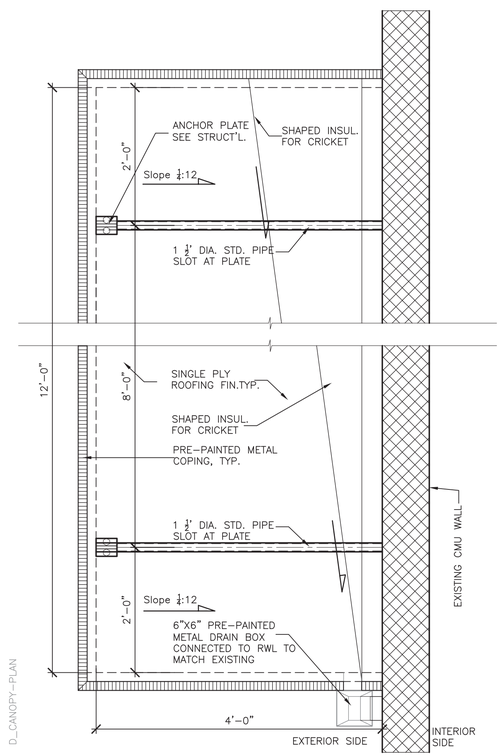

9 ENTRANCE CANOPY

PLAN 1"=1'-0"

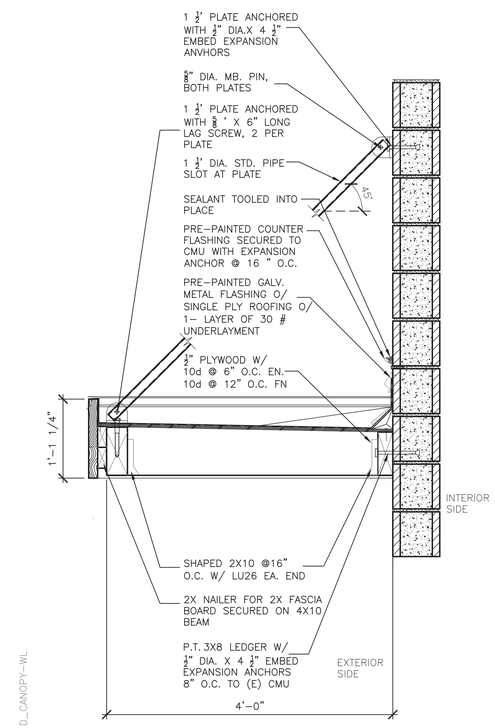

6 ENTRANCE CANOPY

SECTION 1"=1'-0"

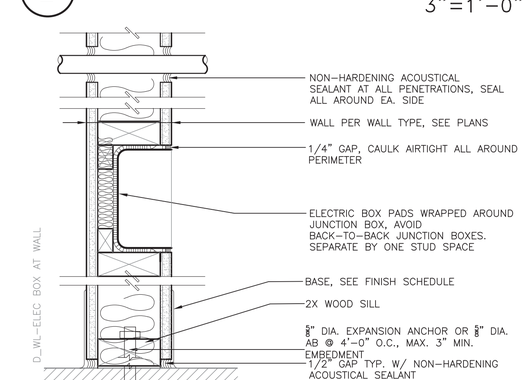

3 WALL BASE/ELECT. BOX

@ WALLS W/ ACOUST. INSUL. 3"=1'-0"

Cuschieri Horton Architects
1475 S. Bascom Ave. Suite 204
Campbell, California 95008
408.371.8200 Fx 408.371.8201

LICENSED ARCHITECT RAFAEL ANTHONY CUSCHIERI C-34957 JAN 31 2021 RENEWAL DATE STATE OF CALIFORNIA

DETAILS

TOWN OF LOS GATOS
ENGINEERING BUILDING TI ~~AND STORAGE BUILDING~~
41 MILES AVENUE,
LOS GATOS, CA 95030

REVISIONS

NO.	ITEM	DATE

PERMIT #:

SUBMITTAL:
CITY SUBMITTAL SET

DRAWN BY: CC
CHECKED BY: RB
JOB NO: 1826
DATE: 12/04/19

SHEET NO.
A9.0

8/11/2020 9:54 AM

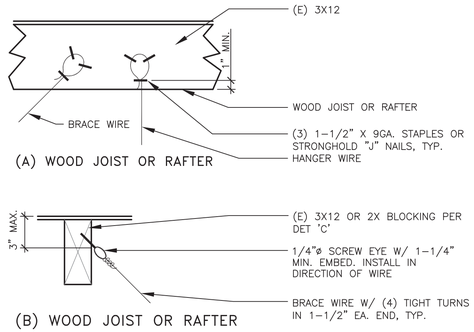

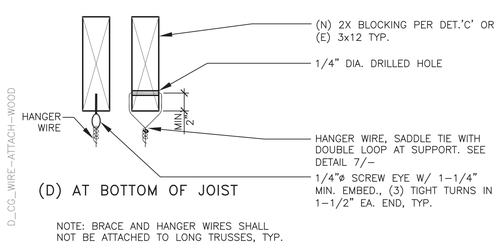

NOTE: BRACE AND HANGER WIRES SHALL NOT BE ATTACHED TO LONG TRUSSES, TYP.

10 CEILING HANGER/BRACE WIRE
ATTACH. @ WD. STRUCT. 1–1/2"=1'–0"

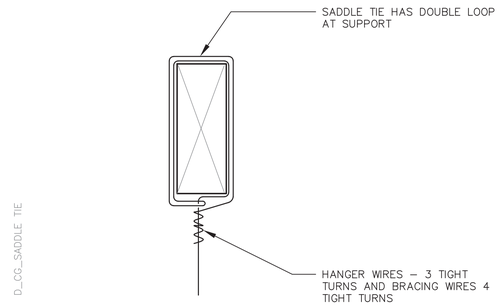

7 SADDLE TIE
3"=1'–0'

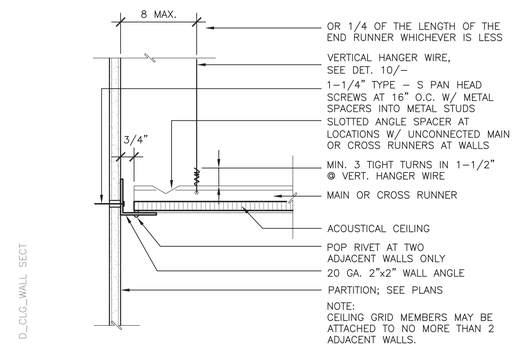

8 CEILING AT WALL SECTION
CONNECTED WALL 3"=1'–0"

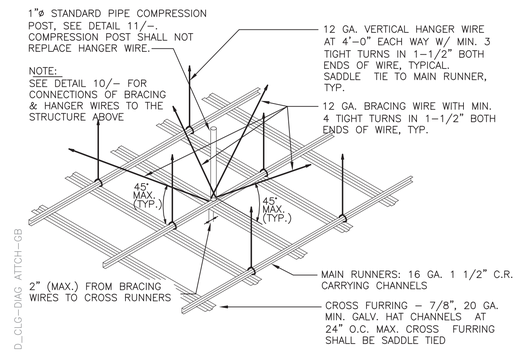

4 DIAGRAMMATIC ATTACHMENT
GYPSUM BOARD N.T.S.

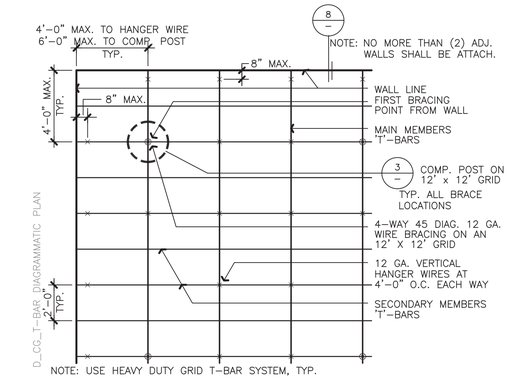

NOTE: USE HEAVY DUTY GRID T–BAR SYSTEM, TYP.

1 DIAGRAMMATIC CEILING PLAN
T–BAR GRID N.T.S.

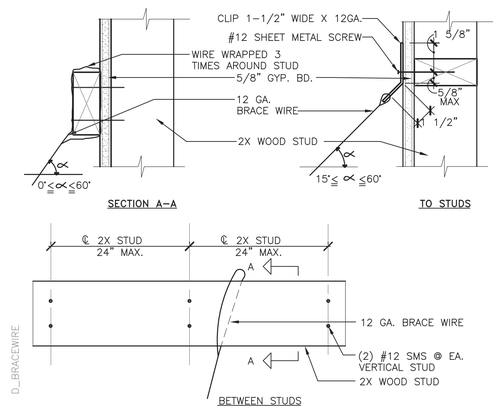

5 BRACING WIRE
TO STUDS 3"=1'–0"

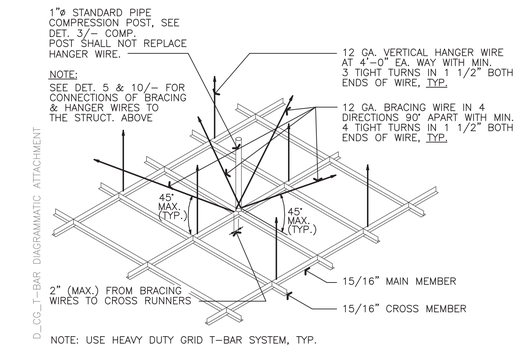

NOTE: USE HEAVY DUTY GRID T–BAR SYSTEM, TYP.

2 DIAGRAMMATIC ATTACHMENT
T–BAR GRID N.T.S.

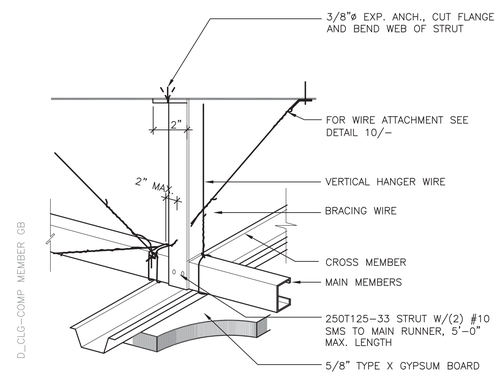

11 COMPRESSION MEMBER
GYPSUM BOARD N.T.S.

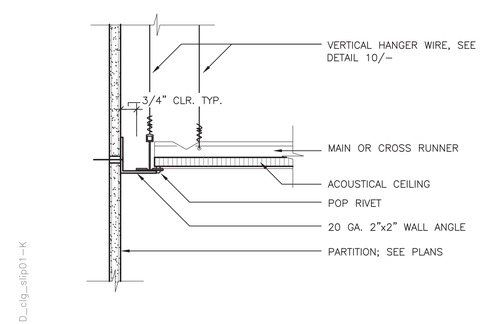

9 CEILING AT WALL SECTION
SLIP JOINT 3"=1'–0"

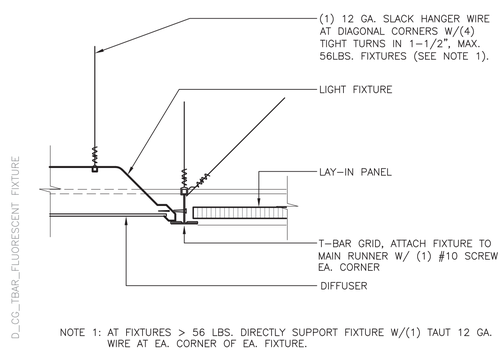

NOTE 1: AT FIXTURES > 56 LBS. DIRECTLY SUPPORT FIXTURE W/(1) TAUT 12 GA. WIRE AT EA. CORNER OF EA. FIXTURE.

6 LED FIXTURE IN CEILING
T–BAR GRID 3"=1'–0"

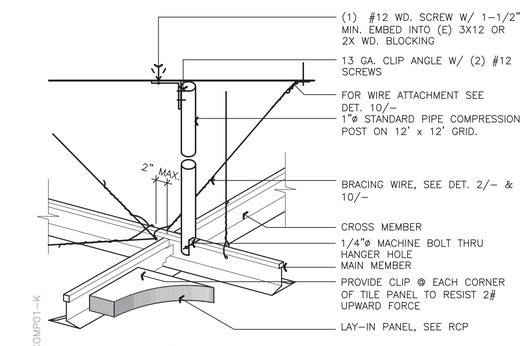

NOTE 1: Lmax = 6'–11", 1"ø STANDARD PIPE HAS KL/r = 1*83"/0.421 = 198 < 200 o.k.

3 COMPRESSION MEMBER
T–BAR GRID N.T.S.

Cuschieri Horton Architects
1475 S. Bascom Ave. Suite 204
Campbell, California 95008
408.371.8200 Fx 408.371.8201

LICENSED ARCHITECT ANTHONY HORTON C–34957 JAN 31 2021 RENEWAL DATE STATE OF CALIFORNIA

DETAILS

TOWN OF LOS GATOS
ENGINEERING BUILDING TI ~~AND STORAGE~~ BUILDING
41 MILES AVENUE,
LOS GATOS, CA 95030

REVISIONS

NO.	ITEM	DATE

PERMIT #:

SUBMITTAL:
CITY SUBMITTAL SET

DRAWN BY:	CC
CHECKED BY:	RB
JOB NO: 1826	DATE: 12/04/19

SHEET NO.
A9.1

8/11/2020 9:54 AM

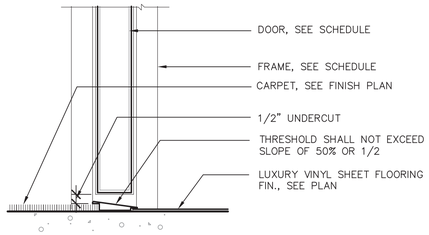

NOTES:
1. PROVIDE CARPET EDGE TRIM ALONG ENTIRE LENGTH OF EXPOSED EDGE
2. 1/2" MAXIMUM CARPET PILE HEIGHT
3. 1/4" VERTICAL MAXIMUM CHANGE IN LEVEL

10 INTERIOR THRESHOLD @ CARPET/LVT
3"=1'-0"

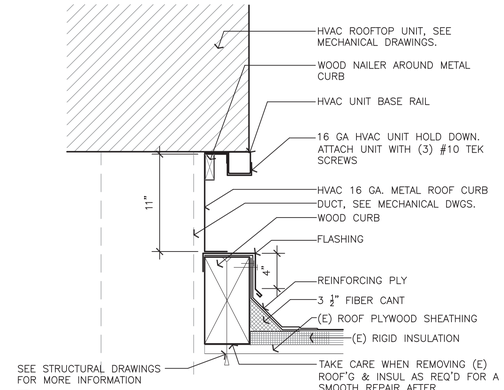

7 ROOFTOP CURB
SCALE 1 1/2" = 1'-0"

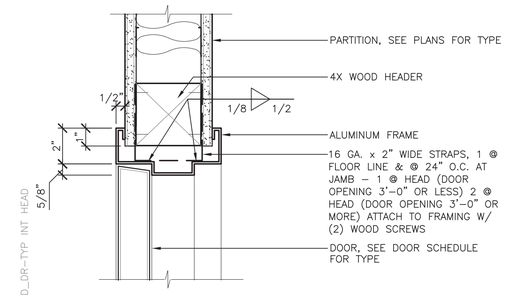

4 TYPICAL INT. DOOR HEAD
JAMB SIMILAR
3"=1'-0"

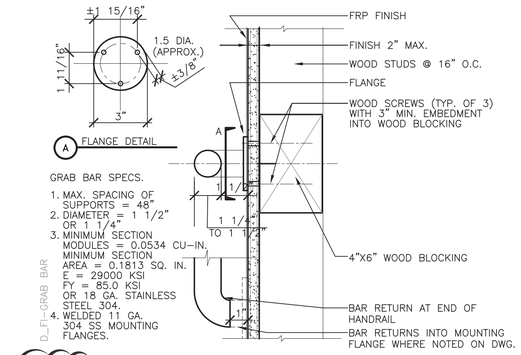

GRAB BAR SPECS.
1. MAX. SPACING OF SUPPORTS = 48"
2. DIAMETER = 1 1/2" OR 1 1/4"
3. MINIMUM SECTION MODULES = 0.0534 CU-IN, MINIMUM SECTION AREA = 0.1813 SQ. IN. E = 29000 KSI FY = 85.0 KSI OR 18 GA. STAINLESS STEEL 304.
4. WELDED 11 GA. 304 SS MOUNTING FLANGES.

1 GRAB BAR DETAIL
3"=1'-0"

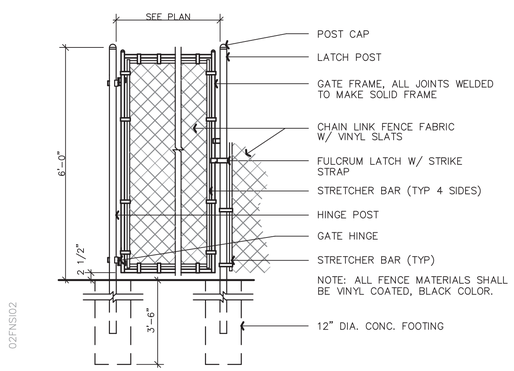

11 CHAIN LINK FENCE AND GATE
N.T.S.

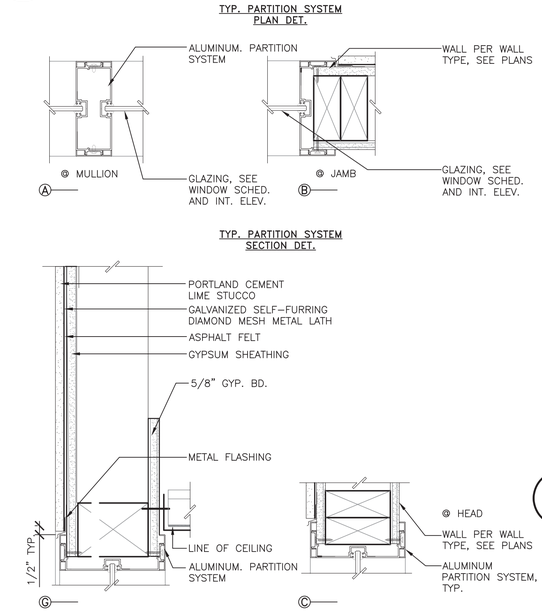

9 ALUM. PARTITION SYSTEM
TYP. DETAILS
3"=1'-0"

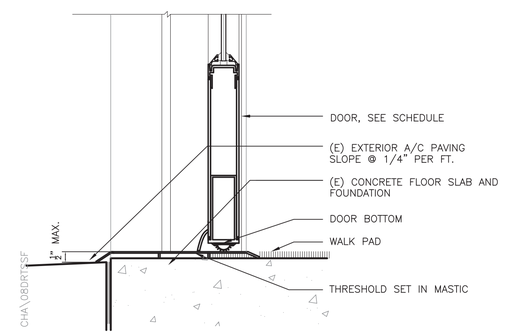

5 EXTERIOR THRESHOLD
3"=1'-0"

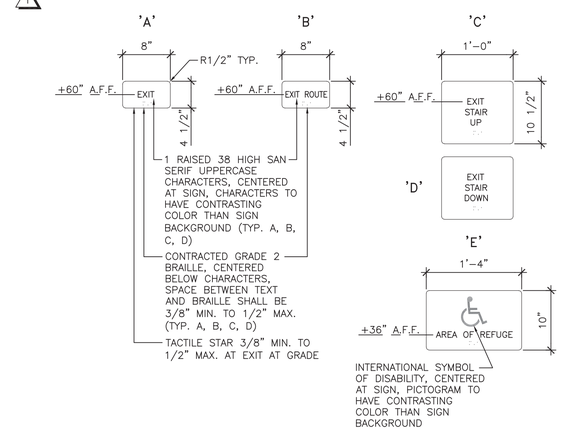

*INCREASE SIGNAGE HEIGHT AS NEEDED TO ACCOMMODATE LETTERING. ALL SIGNS WITHIN EACH STAIR SHALL BE THE SAME HEIGHT.

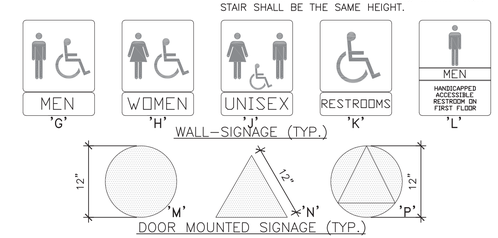

NOTE: PICTOGRAMS AND/OR LETTERING ARE NOT REQUIRED ON DOOR-MOUNTED SIGNAGE

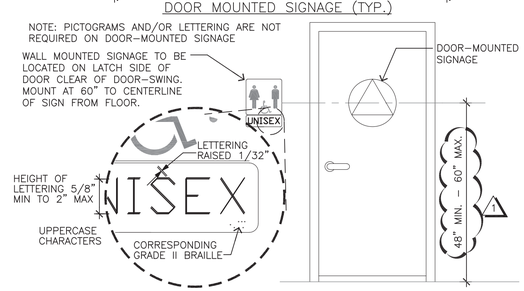

3 ACCESSIBLE SIGNAGE
N.T.S.

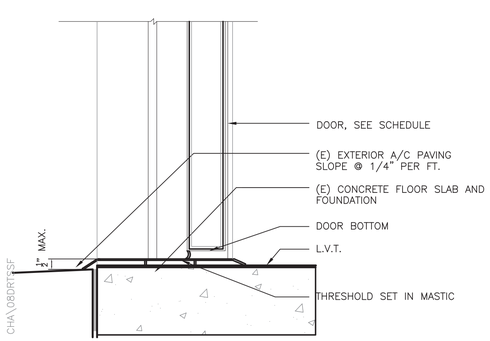

12 EXTERIOR THRESHOLD
3"=1'-0"

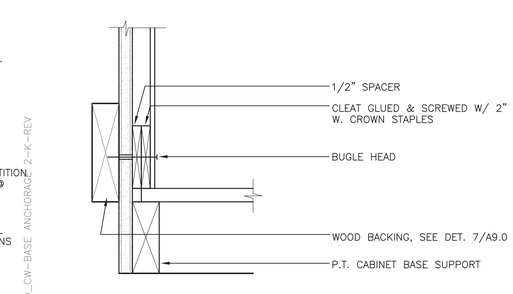

6 BASE CABINET ANCHORAGE
3"=1'-0"

Cuschieri Horton Architects
1475 S. Bascom Ave. Suite 204
Campbell, California 95008
408.371.8200 Fx 408.371.8201

LICENSED ARCHITECT
C-34957
JAN 31 2021
RENEWAL DATE
STATE OF CALIFORNIA

DETAILS

TOWN OF LOS GATOS
ENGINEERING BUILDING TI
41 MILES AVENUE,
LOS GATOS, CA 95030

REVISIONS

NO.	ITEM	DATE
1	RESPONSE TO FIRST REVIEW COMMENTS	07/17/20

PERMIT #:

SUBMITTAL:
CITY SUBMITTAL SET
DRAWN BY: CC
CHECKED BY: RB
JOB NO: 1826
DATE: 12/04/19

SHEET NO.
A9.2

8/11/2020 9:55 AM

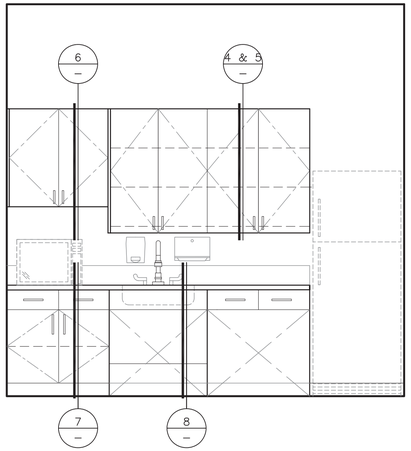

10 TYPICAL CASEWORK

NTS

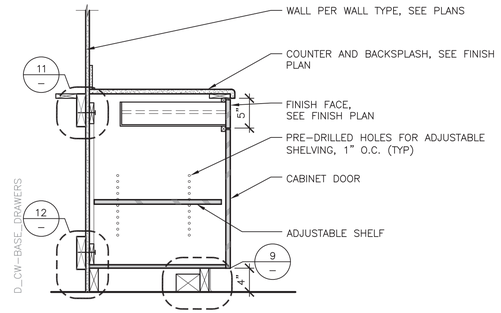

7 BASE CABINET W/ DRAWERS

1"=1'-0"

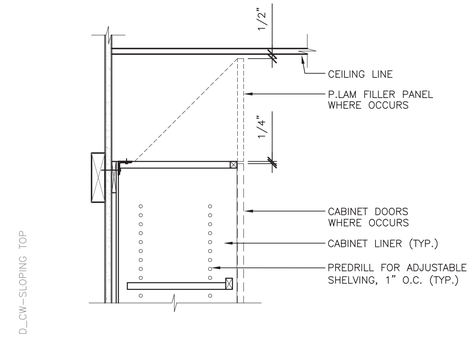

4 SLOPING DUST TOP

1 1/2"=1'-0"

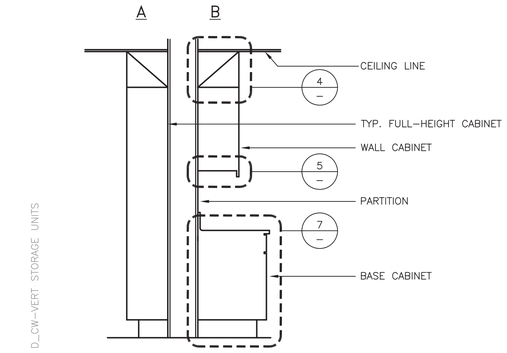

1 VERTICAL STORAGE UNITS

1/2"=1'-0"

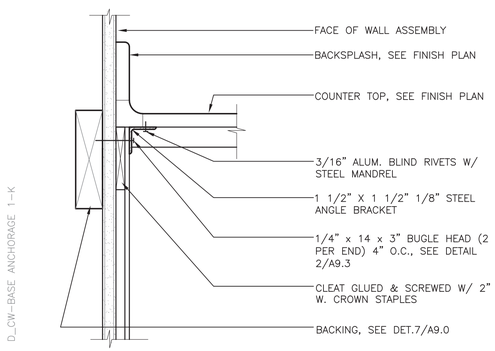

11 BASE CABINET ANCHORAGE

3"=1'-0"

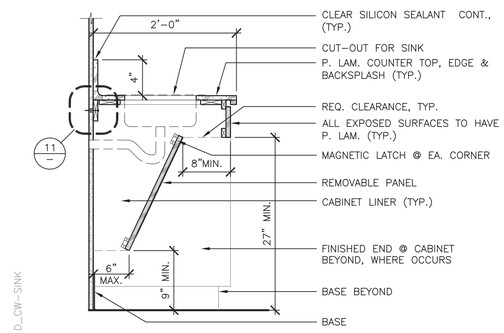

8 CABINET WITH SINK UNIT

HANDICAP ACCESSIBLE 1"=1'-0"

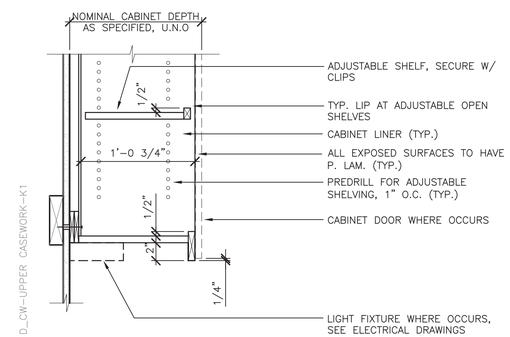

5 UPPER CASEWORK DETAIL

1 1/2"=1'-0"

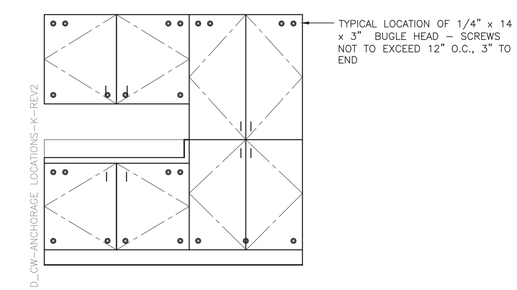

2 TYP. ANCHORAGE LOCATIONS

1/2"=1'-0"

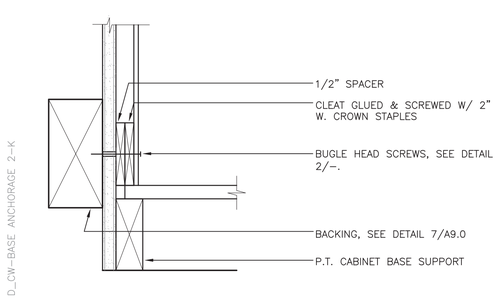

12 BASE CABINET ANCHORAGE

3"=1'-0"

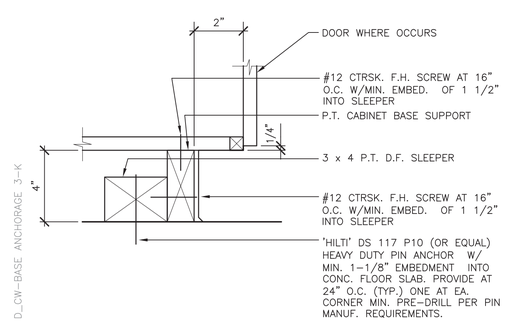

9 BASE CABINET ANCHORAGE

3"=1'-0"

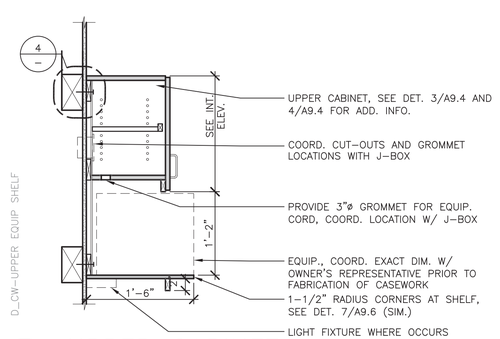

6 UPPER CABINET W/ EQUIP. SHELF

1"=1'-0"

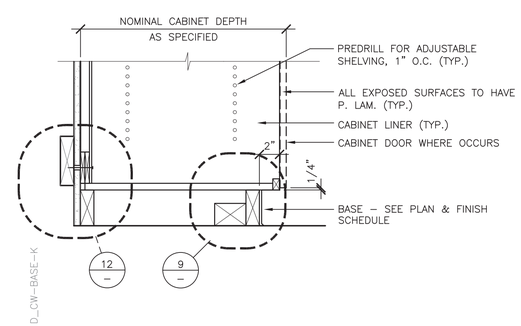

3 TYP. BASE AT BASE CABINET

1 1/2"=1'-0"

Cuschieri Horton Architects
1475 S. Bascom Ave. Suite 204
Campbell, California 95008
408.371.8200 Fx 408.371.8201

LICENSED ARCHITECT
Cuschieri Horton Architects
C-34957
JAN 31 2021
RENEWAL DATE
STATE OF CALIFORNIA

DETAILS

TOWN OF LOS GATOS
ENGINEERING BUILDING TI ~~AND STORAGE BUILDING~~
41 MILES AVENUE,
LOS GATOS, CA 95030

REVISIONS

NO.	ITEM	DATE

PERMIT #:

SUBMITTAL:
CITY SUBMITTAL SET
DRAWN BY: CC
CHECKED BY: RB
JOB NO: 1826
DATE: 12/04/19

SHEET NO.
A9.3

8/11/2020 9:56 AM

ABBREVIATIONS

ABBREVIATION	DESCRIPTION
(E)	EXISTING
ARCH	ARCHITECT OR ARCHITECTURAL
BLDG	BUILDING
BLK	BLOCK
BLKG	BLOCKING
BTWN	BETWEEN
CIP	CAST-IN-PLACE
CL	CENTER LINE
CLR	CLEAR OR CLEARANCE
CMU	CONCRETE MASONRY UNIT
CONC	CONCRETE
CTR	CENTER
CTRD	CENTERED
db	DIAMETER OF BOLT OR REBAR
DEMO	DEMOLISH
DF	DOUGLAS FIR
DIA	DIAMETER
DWG(S)	DRAWING(S)
EA	EACH
EMBED	EMBEDMENT
EN	EDGE NAIL
EQ	EQUAL
EXP	EXPANSION
FN	FIELD NAILING
GLB	GLUE-LAMINATED BEAM
HDR	HEADER
HGR	HANGER
INFO	INFORMATION
MAX	MAXIMUM
MB	UNFINISHED MACHINE BOLT
MEP	MECHANICAL, ELECTRICAL, PLUMBING, FIRE PROTECTION
MIN	MINIMUM
NTS	NOT TO SCALE
OC	ON CENTER
OPNG(S)	OPENING(S)
PAF	POWDER ACTUATED FASTENER
PL	PLATE
PLY	PLYWOOD
PSF	POUNDS PER SQUARE FOOT
PSI	POUNDS PER SQUARE INCH
REINF	REINFORCE(D) (ING) OR (MENT)
REQD	REQUIRED
SAD	SEE ARCHITECTURAL DRAWINGS
SCHED	SCHEDULE(D)
SEOR	STRUCTURAL ENGINEER OF RECORD
SIM	SIMILAR
SMS	SHEET METAL SCREW(S)
SOG	SLAB ON GRADE
TYP	TYPICAL
UON	UNLESS OTHERWISE NOTED
VIF	VERIFY IN FIELD
W/	WITH

I. GENERAL REQUIREMENTS

A. THE STRUCTURAL DRAWINGS AND PROJECT SPECIFICATIONS REPRESENT THE FINISHED STRUCTURE. THE MEANS, METHODS, PROCEDURES AND SEQUENCE OF CONSTRUCTION ARE THE RESPONSIBILITY OF THE CONTRACTOR. THE CONTRACTOR SHALL TAKE ALL NECESSARY PRECAUTIONS TO MAINTAIN AND ENSURE THE INTEGRITY OF THE STRUCTURE AT ALL STAGES OF CONSTRUCTION.

B. DURING THE CONSTRUCTION PERIOD, THE CONTRACTOR SHALL BE RESPONSIBLE FOR THE SAFETY OF PERSONNEL AND PROPERTY ON AND AROUND THE JOBSITE. THE CONTRACTOR SHALL PROVIDE SHORING, BRACING, GUYS, ETC. IN ACCORDANCE WITH ALL LOCAL, STATE, AND NATIONAL STANDARDS.

C. ALL CONSTRUCTION, TESTING, AND INSPECTIONS SHALL CONFORM TO THE BUILDING CODE REFERENCED UNDER THE HEADING “BASIS OF DESIGN” BELOW.

D. STANDARDS REFERENCED IN THESE DRAWINGS SHALL BE THE LATEST EDITION, UNLESS OTHERWISE NOTED.

E. SEE DRAWINGS OTHER THAN STRUCTURAL FOR: FLOOR FINISHES; DEPRESSIONS IN FLOOR SLABS; OPENINGS IN WALLS AND FLOORS REQUIRED BY ARCHITECTURAL AND MEP FEATURES; EXTERIOR PAVING; CURBS; SLOPES; DRAINS; PADS; NON-STRUCTURAL PARTITIONS; EMBEDDED ITEMS; ETC. COORDINATE THESE ITEMS WITH THE STRUCTURAL DRAWINGS.

F. THE CONTRACTOR SHALL VERIFY ALL DIMENSIONS AT THE JOB SITE BEFORE COMMENCING WORK AND SHALL REPORT ANY DISCREPANCIES TO THE ARCHITECT.

G. OMISSIONS OR DISCREPANCIES BETWEEN THE VARIOUS ELEMENTS OF THE CONTRACT DOCUMENTS SHALL BE BROUGHT TO THE ATTENTION OF THE ARCHITECT AND STRUCTURAL ENGINEER AND RESOLVED BEFORE PROCEEDING WITH THE WORK.

H. DO NOT SCALE THE DRAWINGS; USE WRITTEN DIMENSIONS ONLY. WHERE NO DIMENSIONS ARE PROVIDED OR WHERE DIMENSIONS PROVIDED CONFLICT WITH OTHER DRAWINGS, CONSULT THE ARCHITECT AND SEOR.

I. WHERE MEMBER LOCATIONS ARE NOT DIMENSIONED, MEMBERS SHALL BE LOCATED ON COLUMN LINES OR EQUALLY SPACED BETWEEN MEMBERS ON COLUMN LINES OR BETWEEN MEMBERS OTHERWISE LOCATED. CENTERLINES OF COLUMNS, WALLS, FRAMING MEMBERS, AND FOUNDATIONS COINCIDE WITH GRIDLINES, UNLESS OTHERWISE NOTED.

J. THE CONTRACTOR SHALL VERIFY THAT CONSTRUCTION LOADS DO NOT EXCEED THE CAPACITY OF THE STRUCTURE AT THE TIME THE LOADS ARE PLACED.

II. EXISTING CONSTRUCTION

A. WORK SHOWN IS NEW UNLESS OTHERWISE NOTED AS EXISTING, (E).

B. EXISTING CONSTRUCTION SHOWN IN THESE DRAWINGS WAS OBTAINED FROM AS-BUILT DRAWINGS ENTITLED "SHOP AND EQUIPMENT BUILDING", DATED MARCH 1, 1979 AND PREPARED BY HIGGINS & ROOT ASSOCIATES AND FROM LIMITED SITE INVESTIGATIONS. THE CONTRACTOR SHALL VERIFY ALL EXISTING CONDITIONS, REVIEW ALL AVAILABLE EXISTING DRAWINGS AND VERIFY DIMENSIONS PRIOR TO CONSTRUCTION. THE CONTRACTOR SHALL NOTIFY THE ARCHITECT AND SEOR OF ALL DISCREPANCIES AND EXCEPTIONS BEFORE PROCEEDING WITH THE WORK.

C. THE REMOVAL, CUTTING, DRILLING, ETC. OF EXISTING WORK SHALL BE PERFORMED WITH GREAT CARE AND SMALL TOOLS IN ORDER TO MAINTAIN THE STRUCTURAL INTEGRITY OF THE BUILDING. IF EXISTING STRUCTURAL MEMBERS NOT INDICATED FOR REMOVAL INTERFERE WITH THE NEW WORK, THE SEOR SHALL BE NOTIFIED IMMEDIATELY. APPROVAL SHALL BE OBTAINED PRIOR TO REMOVAL OF THE EXISTING MEMBERS.

D. THE CONTRACTOR SHALL SAFELY SHORE EXISTING CONSTRUCTION WHEREVER EXISTING SUPPORTS ARE REMOVED TO ALLOW INSTALLATION OF THE NEW WORK. THE EXISTING CONSTRUCTION SHALL BE CONNECTED AND/OR EMBEDDED INTO THE NEW CONSTRUCTION AS SHOWN OR SPECIFIED.

E. ALL SHORING METHODS AND SEQUENCING OF DEMOLITION SHALL BE SPECIFIED BY A LICENSED CIVIL OR STRUCTURAL ENGINEERING IN THE STATE OF CALIFORNIA TO BE RETAINED BY THE CONTRACTOR. SEE SPECIFICATIONS FOR DETAILED REQUIREMENTS.

F. THE CONTRACTOR SHALL VERIFY THE LOCATION OF EXISTING UTILITIES BEFORE BEGINNING WORK. SPECIAL CARE SHALL BE TAKEN TO PROTECT UTILITIES THAT ARE TO REMAIN IN SERVICE DURING CONSTRUCTION.

G. THE CONTRACTOR SHALL PROMPTLY REPAIR DAMAGE CAUSED DURING OPERATIONS WITH SIMILAR MATERIALS AND WORKMANSHIP.

H. THE CONTRACTOR SHALL LOCATE EXISTING REINFORCING STEEL WHERE EXISTING CONCRETE IS TO BE CUT, CORED OR SAWN. LOCATION SHALL BE DONE USING A NON-DESTRUCTIVE METHOD. DO NOT DAMAGE EXISTING REINFORCING WITHOUT NOTIFYING THE ARCHITECT AND SEOR.

J. ALL EXISTING CONCRETE SURFACES IN CONTACT WITH NEW CONCRETE SHALL BE INTENTIONALLY ROUGHENED TO ¼" AMPLITUDE WITH EXPOSED AGGREGATE.

III. BASIS OF DESIGN

A. THE STRUCTURAL DESIGN OF THIS PROJECT IS GOVERNED BY THE 2016 CALIFORNIA BUILDING CODE (CBC).

B. RISK CATEGORY = II

C. LIVE LOADS:
1. ROOF = 20 PSF

D. WIND DESIGN DATA:
1. BASIC WIND SPEED = 110 MPH
2. EXPOSURE CATEGORY = C

E. SEISMIC DESIGN DATA:
1. I = 1.0
2. SDS = 1.000
3. SD1 = 0.600
4. SITE CLASS = D
5. SEISMIC DESIGN CATEGORY = D
6. BASIC SEISMIC LOAD RESISTING SYSTEM = SPECIAL REINFORCED MASONRY SHEAR WALLS
7. R = 5.0
8. ANALYSIS PROCEDURE USED = EQUIVALENT LATERAL FORCE PROCEDURE
9. REDUNDANCY FACTOR = 1.0

F. EXISTING FOOTINGS ARE CHECKED AND NEW FOOTINGS ARE DESIGNED ASSUMING THE FOLLOWING:
1. BEARING PRESSURE FOR DEAD + LIVE LOADS = 1500 PSF
2. BEARING PRESSURE FOR DEAD + LIVE + WIND/ SEISMIC LOADS = 2000 PSF
3. PASSIVE PRESSURE = 100 PCF

1

G. PREFABRICATED STORAGE BUILDING FOUNDATIONS DESIGNED BASED ON STRUCTURAL DRAWINGS PREPARED BY EMPIRE STEEL BUILDINGS DATED JUNE 28, 2019 JOB NUMBER 17-B-23289.

IV. CONCRETE

A. MIXING, BATCHING, TRANSPORTING AND PLACING OF ALL CONCRETE SHALL CONFORM TO ACI 301, SPECIFICATION FOR STRUCTURAL CONCRETE FOR BUILDINGS.

B. ALL CONCRETE SHALL BE THOROUGHLY CONSOLIDATED.

C. THE SCHEDULE BELOW INDICATES THE MINIMUM CONCRETE DESIGN MIX REQUIREMENTS. SEE THE SPECIFICATIONS FOR ADDITIONAL CONCRETE PROPERTIES.

TYPE	LOCATION	MINIMUM 28-DAY STRENGTH (PSI)	MAX W/C RATIO
A	SLAB ON GRADE	2500	0.45
B	WALL INFILL	3000	N/A
C	FOOTINGS	4000 1	N/A
D	HOUSEKEEPING PAD	2500	0.45

D. CONCRETE CLEAR COVER OVER MILD REINFORCING STEEL SHALL BE AS FOLLOWS, UNLESS OTHERWISE NOTED:
1. CONCRETE CAST AGAINST AND PERMANENTLY EXPOSED TO EARTH = 3”
2. CONCRETE EXPOSED TO EARTH OR WEATHER:
   a. NO. 5 BARS AND SMALLER = 1-1/2”
   b. NO. 6 BARS AND LARGER = 2”
3. CONCRETE NOT EXPOSED TO WEATHER OR IN CONTACT WITH GROUND:
   a. SLABS, WALLS, JOISTS:
      i. NO. 11 BARS AND SMALLER = 3/4”
      ii. NO. 14 BARS AND LARGER = 1-1/2”
   b. BEAMS, COLUMNS:
      i. PRIMARY REINFORCEMENT, TIES, STIRRUPS, SPIRALS = 1-1/2”
   c. SHELLS, FOLDED PLATE MEMBERS:
      i. NO. 5 BARS AND SMALLER = 1/2”
      ii. NO. 6 BARS AND LARGER = 3/4”

E. NON-SHRINK GROUT SHALL HAVE A MINIMUM COMPRESSIVE STRENGTH OF 6000 PSI AT 28 DAYS.

F. CONSTRUCTION JOINTS
1. NO HORIZONTAL CONSTRUCTION JOINTS ARE PERMITTED IN BEAMS, WALLS OR SLABS UNLESS APPROVED BY THE SEOR IN WRITING.
2. ALL CONSTRUCTION JOINTS SHALL BE CONSTRUCTED IN ACCORDANCE WITH TYPICAL CONSTRUCTION JOINT DETAILS.
3. ALL CONSTRUCTION JOINT LOCATIONS SHALL BE COORDINATED AND CONSTRUCTED IN ACCORDANCE WITH ARCHITECTURAL FINISHES AND TREATMENTS.
4. ALL SURFACES OF CONSTRUCTION JOINTS SHALL BE CLEANED TO REMOVE DUST, CHIPS OR OTHER FOREIGN MATTER PRIOR TO PLACING ADJACENT CONCRETE.

V. REINFORCING STEEL

A. ALL REINFORCING BARS SHALL BE DEFORMED BARS CONFORMING TO THE REQUIREMENTS OF ASTM A615 AND ASTM A706 WHERE REQUIRED; ALL BARS TO BE GRADE 60 UNLESS OTHERWISE NOTED.

E. DETAIL REINFORCING STEEL BASED ON THE PROJECT REQUIREMENTS, ACI 318, AND ACI 315.

F. TERMINATION OF REINFORCEMENT:
1. TERMINATE ALL BARS IN LAPS, 90 DEGREE BENDS OR WITH DOWELS EPOXIED INTO EXISTING CONCRETE.

VI. STRUCTURAL STEEL

A. ALL STRUCTURAL STEEL SHALL BE DETAILED, FABRICATED AND ERECTED IN ACCORDANCE WITH AISC SPECIFICATIONS.

B. ALL WELDING SHALL BE DONE IN ACCORDANCE WITH AWS D1.1 AND PERFORMED BY AWS CERTIFIED WELDERS.

C. STRUCTURAL STEEL SHALL CONFORM TO THE FOLLOWING:
1. MISCELLANEOUS PLATES = ASTM A36
2. ANGLES AND CHANNELS = ASTM A36
3. RECTANGULAR AND SQUARE HSS MEMBERS = ASTM A500, GR B
4. ROUND HSS MEMBERS = ASTM A500, GR B
5. PIPES = ASTM A53, GR B
6. BOLTS = ASTM A307
7. NUTS = ASTM A563
8. WASHERS (FLAT OR BEVELLED) = ASTM F436
9. ANCHOR RODS = ASTM F1554, GR 36 UON
10. WELDING ELECTRODES = E70XX, UON

D. ALL STEEL EXPOSED TO WEATHER SHALL BE GALVANIZED, UON.

E. FIELD MODIFICATIONS TO STRUCTURAL STEEL MEMBERS IS PROHIBITED WITHOUT PRIOR APPROVAL OF THE ARCHITECT AND SEOR.

VII. WOOD

A. ALL WOOD FRAMING SHALL CONFORM TO NATIONAL DESIGN SPECIFICATIONS (NDS) FOR WOOD CONSTRUCTION AND APA PDS, PLYWOOD DESIGN SPECIFICATION.

B. ALL WOOD FRAMING SHALL BE DOUGLAS FIR LARCH, UNLESS OTHERWISE NOTED. GRADE SHALL BE AS FOLLOWS:
1. JOISTS = 2
2. WALL STUDS = 2
3. SILL PLATES = PRESSURE TREATED
4. POSTS = 2
5. BEAMS = 2
6. BLOCKING AND MISCELLANEOUS = 2

C. REJECTION OF WOOD MEMBERS: THE PROVISION IN DOC PS 20 (AS REFERENCED BY CBC 2303.1.1) WHICH PERMITS FIVE PERCENT OF THE MATERIAL TO FALL BELOW GRADE SHALL NOT BE CONSTRUED TO PERMIT BELOW-GRADE MATERIAL TO BE USED AS LOAD-CARRYING MEMBERS WHICH HAVE BEEN DESIGNED FOR SPECIFIC ALLOWABLE STRESSES AND ACCEPTABLE SAFETY FACTORS. MATERIALS WHICH FALL BELOW GRADE SHALL BE REJECTED FOR LOAD-CARRYING USE. WOOD MEMBERS WHICH ARE REQUIRED TO CARRY DESIGN LOADS AND WHICH THE PROJECT ARCHITECT, SEOR OR INSPECTOR JUDGE TO BE MISGRADED SHALL BE REINSPECTED BY A QUALIFIED LUMBER GRADING INSPECTOR TO VERIFY THE PROPER GRADING OF THE MATERIAL. WOOD MEMBERS WHICH HAVE PERMISSIBLE GRADE CHARACTERISTICS OR DEFECTS IN SUCH COMBINATION AS TO AFFECT THE SERVICEABILITY OF THE MEMBER SHALL BE REJECTED BY THE PROJECT INSPECTOR WITH THE CONCURRENCE OF THE ARCHITECT OR SEOR.

D. ALL LUMBER IN CONTACT WITH CONCRETE OR CONCRETE MASONRY 0'-8" OR LESS ABOVE THE GROUND SHALL BE PRESSURE TREATED.

E. MAXIMUM MOISTURE CONTENT SHALL BE 15%AT TIME OF FRAMING FOR NEW WOOD MEMBERS ADJACENT TO EXISTING WOOD MEMBERS. ALL OTHER MEMBERS SHALL HAVE A MAXIMUM MOISTURE CONTENT OF 19% AT TIME OF FRAMING. REFER TO ARCHITECTURAL DRAWINGS, PROJECT SPECIFICATIONS AND CLADDING MANUFACTURERS' INFORMATION FOR MORE STRINGENT MOISTURE CONTENT REQUIREMENTS.

F. WOOD CONNECTORS SHALL BE AS MANUFACTURED BY SIMPSON STRONG TIE OR EQUAL PRODUCT IF APPROVED BY SEOR. SIMPSON DESIGNATIONS USED IN THESE DRAWINGS.

G. NAILS SHALL BE COMMON WIRE GAGE, UNLESS OTHERWISE NOTED AND CONFORM TO CBC TABLE 2304.10.1.

H. FASTENERS INSTALLED IN PRESSURE TREATED OR FIRE RETARDANT TREATED WOOD SHALL BE GALVANIZED.

VIII. POST-INSTALLED ANCHORS

A. POST-INSTALLED ANCHORS INCLUDE EXPANSION ANCHORS, EPOXY ANCHORS AND REINFORCING STEEL DOWELS, SCREW ANCHORS AND POWDER-ACTUATED FASTENERS.

B. DO NOT DAMAGE OR CUT EXISTING REINFORCING STEEL WHILE INSTALLING POST-INSTALLED ANCHORS. NOTIFY SEOR IF EXISTING REINFORCING STEEL INTERFERES WITH INSTALLATION OF POST-INSTALLED ANCHORS.

C. ALL MIS-DRILLED OR UNACCEPTABLE HOLES SHALL NOT BE USED AND SHALL BE GROUTED SOLID.

D. ALL POST-INSTALLED ANCHORS SHALL BE INSTALLED IN ACCORDANCE WITH APPLICABLE ICC-ES REPORT AND MANUFACTURER'S RECOMMENDATIONS.

E. PROVIDE SPECIAL INSPECTION FOR THE INSTALLATION OF ALL POST-INSTALLED ANCHORS, UNLESS OTHERWISE NOTED.

F. FIELD TEST POST-INSTALLED ANCHORS, UNLESS OTHERWISE NOTED. FIELD TESTING SHALL BE IN COMPLIANCE WITH THE FOLLOWING:
1. 10% OF POST-INSTALLED ANCHORS USED FOR SILL PLATE BOLTING SHALL BE TESTED; 100% OF ALL OTHER POST-INSTALLED ANCHORS USED FOR STRUTURAL APPLICATIONS SHALL BE TESTED.
2. 50% OF POST-INSTALLED ANCHORS USED FOR NON-STRUCTURAL APPLICATIONS SHALL BE TESTED, INCLUDING ONE HALF OF ALL ANCHORS IN EACH GROUP.
   a. IF ANY ANCHOR FAILS TESTING, ALL ANCHORS OF THE SAME TYPE THAT ARE UNTESTED SHALL BE TESTED UNTIL 20 CONSECUTIVE ANCHORS PASS.
   b. NO TESTING REQUIRED FOR POWDER-ACTUATED FASTENERS USED TO ATTACH TRACKS OF INTERIOR, NON-STRUCTURAL PARTITION WALLS WHERE THERE ARE AT LEAST THREE FASTENERS PER PIECE OF TRACK.
3. NO TESTING REQUIRED OF REINFORCING STEEL DOWELS ACROSS COLD JOINTS IN CONCRETE SLABS ON GRADE.
4. TORQUE TESTING MAY BE USED FOR TORQUE CONTROLLED POST-INSTALLED ANCHORS; TENSION TEST ALL OTHER POST-INSTALLED ANCHORS.
5. TORQUE TESTING SHALL BE IN ACCORDANCE WITH CBC SECTION 1910A.5.5.2.
6. TENSION TESTING SHALL BE IN ACCORDANCE WITH CBC SECTION 1910A.5.5.1.
7. ALL FIELD TESTING SHALL BE DONE UNDER THE OBSERVATION OF THE PROJECT INSPECTOR.
8. TESTING SHALL OCCUR AT LEAST 24 HOURS AFTER THE ANCHOR HAS BEEN INSTALLED.

G. EPOXY ANCHORS AND REINFORCING STEEL DOWELS
1. FOR INSTALLATION IN CONCRETE, EPOXY SHALL BE ONE OF THE FOLLOWING:
   a. SET-XP PER ICC-ES ESR-2508 AS MANUFACTURED BY SIMPSON STRONG TIE
   b. HIT-RE 500 V3 PER ICC-ES ESR-3814 AS MANUFACTURED BY HILTI, INC.
   c. HY-200 PER ICC-ES ESR-3187 AS MANUFACTURED BY HILTI, INC.
2. FOR INSTALLATION IN FULLY-GROUTED MASONRY, EPOXY SHALL BE ONE OF THE FOLLOWING:
   a. SET-XP PER ICC-ES ESR-2508 AS MANUFACTURED BY SIMPSON STRONG TIE.
   b. HY-200 PER ICC-ES ESR-3963 AS MANUFACTURED BY HILTI, INC.
3. EPOXIED ANCHOR RODS SHALL BE CARBON STEEL THREADED RODS PER APPROPRIATE ICC-ES REPORT; EPOXIED REINFORCING STEEL DOWELS SHALL BE ASTM A615 GR 60 UNLESS OTHERWISE NOTED.
4. MINIMUM ANCHOR EMBEDMENT AND TENSION TEST VALUES ARE AS FOLLOWS:

EPOXY ANCHORS IN NORMAL-WEIGHT CONCRETE (f'c = 3000 PSI MIN)				
REBAR SIZE	EMBED (IN)	TENSION TEST VALUE (LBS)		
		HY-200	HIT-RE 500-V3	SET-XP
#3	3	2900	2750	1050
#4	4	5180	4940	3760
#5	5	8130	7870	5270
#6	6	11120	11120	6780
#7	7	12260	14020	8060

EPOXY ANCHORS IN FULLY-GROUTED CMU (f'm = 1500 PSI MIN)			
REBAR SIZE	EMBED (IN)	TENSION TEST VALUE (LBS)	
		SET-XP	HY-200
#3	3 3/8	2790	1920
#4	4 1/2	3670	3040
#5	5 5/8	4370	3620
#6	6 3/4	NA	4430

EPOXY ANCHORS IN FULLY-GROUTED CMU (f'm = 1500 PSI MIN)			
THREADED ROD DIAMETER (IN)	EMBED (IN)	TENSION TEST VALUE (LBS)	
		SET-XP	HY-200
3/8	3 3/8	2980	1920
1/2	4 1/2	3650	3040
5/8	5 5/8	3790	3620
3/4	6 3/4	3790	4430

Cuschieri Horton Architects
1475 S. Bascom Ave, Suite 204
Campbell, California 95008
408.371.8200 Fx 408.371.8201

BASE DESIGN
582 MARKET ST. STE. 1402
SAN FRANCISCO, CA 94104
Office:(415) 466-2997
www.BASEdesigninc.com

REGISTERED PROFESSIONAL ENGINEER KATHRYN BRIGGS No. 5732 Exp. 12/31/20 STRUCTURAL CALIFORNIA

ABBREVIATIONS AND GENERAL NOTES

TOWN OF LOS GATOS
ENGINEERING BUILDING TI ~~AND STORAGE BUILDING~~
41 MILES AVENUE,
LOS GATOS, CA 95030

REVISIONS

NO.	ITEM	DATE
1	RESPONSE TO FIRST COMMENTS	6/4/20

PERMIT #:

SUBMITTAL:
CITY SUBMITTAL SET

DRAWN BY: SN
CHECKED BY: KMB

JOB NO:
18174 12/04/19

SHEET NO
S1.0

5. NO TESTING IS REQUIRED FOR #3 REINFORCING STEEL EPOXIED DOWELS AT CURBS AND HOUSEKEEPING PADS.

H. EXPANSION ANCHORS
1. FOR INSTALLATION IN CONCRETE, EXPANSION ANCHORS SHALL BE ONE OF THE FOLLOWING:
a. STRONG BOLT 2 PER ICC-ES ESR-3037 AS MANUFACTURED BY SIMPSON STRONG TIE.
b. KWIK BOLT TZ PER ICC-ES ESR-1917 AS MANUFACTURED BY HILTI, INC.
2. FOR INSTALLATION IN FULLY-GROUTED CONCRETE MASONRY, EXPANSION ANCHORS SHALL BE ONE OF THE FOLLOWING:
a. WEDGE ALL PER ICC-ES ESR-1396 AS MANUFACTURED BY SIMPSON STRONG TIE.
b. KWIK BOLT 3 PER ICC-ES ESR-1385 AS MANUFACTURED BY HILTI, INC.
3. USE STAINLESS STEEL AT EXTERIOR, WEATHER-EXPOSED OR DAMP LOCATIONS; CARBON STEEL EXPANSION ANCHORS MAY BE USED AT ALL OTHER LOCATION, UNLESS OTHERWISE NOTED.
4. MINIMUM ANCHOR EMBEDMENT AND TORQUE TEST VALUES ARE AS FOLLOWS:

KWIK BOLT TZ IN NORMAL WEIGHT CONCRETE (f'c = 3000 PSI MIN)			
ANCHOR DIAMETER	EMBED (IN)	MINIMUM HOLE	TORQUE TEST
(IN)		DEPTH (IN)	VALUE (FT-LBS)
3/8	2 5/16	2 5/8	25
1/2	2 3/8	2 5/8	40
5/8	4 7/16	4 3/4	60
3/4	5 9/16	5 3/4	110

STRONG BOLT 2 IN NORMAL WEIGHT CONCRETE (f'c = 3000 PSI MIN)			
ANCHOR DIAMETER	EMBED (IN)	MINIMUM HOLE	TORQUE TEST
(IN)		DEPTH (IN)	VALUE (FT-LBS)
3/8	1 7/8	2	30
1/2	2 3/4	3	60
5/8	5 1/8	5 3/8	90
3/4	5 3/4	6	150

KWIK BOLT 3 IN CONCRETE MASONRY (f'm = 1500 PSI MIN)			
ANCHOR DIAMETER	EMBED (IN)	MINIMUM HOLE	TORQUE TEST
(IN)		DEPTH (IN)	VALUE (FT-LBS)
1/4	2	2 1/4	4
3/8	2 1/2	2 7/8	15
1/2	3 1/2	4	25
5/8	4	4 5/8	65
3/4	4 3/4	5 1/2	120

WEDGE ALL IN CONCRETE MASONRY (f'm = 1500 PSI MIN)			
ANCHOR DIAMETER	EMBED (IN)	MINIMUM HOLE	TORQUE TEST
(IN)		DEPTH (IN)	VALUE (FT-LBS)
3/8	2 5/8	3 1/8	30
1/2	3 1/2	4.0000	35
5/8	4 3/8	5 1/8	55
3/4	5 1/4	6.0000	120

5. CONTRACTOR SHALL PROVIDE ANCHORS WITH SUFFICIENT TOTAL LENGTH FOR THE SPECIFIED EMBEDMENT LENGTH, THICKNESS OF FASTENED PART, WASHER AND NUT.

J. POWDER-ACTUATED FASTENERS
1. PAF SHALL BE ONE OF THE FOLLOWING:
a. SIMPSON STRONG TIE POWDER-ACTUATED FASTENERS PER ICC-ES ESR-2138 FOR ANCHORAGE OF METAL TO CONCRETE, MASONRY OR STEEL.
b. HILTI, INC. X-U PER ICC-ES ESR-2269 FOR ANCHORAGE OF METAL TO CONCRETE, MASONRY OR STEEL
c. HILTI, INC. X-CP 72 PER ICC-ES ESR-2379 FOR ANCHORAGE OF SILL PLATES TO CONCRETE
2. PROVIDE 0.08"x1.1"x1.1" SQUARE OR 0.08"x1.425" DIAMETER ROUND WASHER AT EACH PAF.
3. MINIMUM PAF EMBED INTO CONCRETE SHALL BE 1", UNLESS OTHERWISE NOTED.
4. MINIMUM PAF EMBED INTO STEEL SHALL BE PER MANUFACTURER.

IX. TESTING AND SPECIAL INSPECTIONS

1

A. SPECIAL INSPECTIONS SHALL BE PERFORMED BY A SPECIAL INSPECTOR PER CBS SECTIONS 1704 AND 1705. THE SPECIAL INSPECTOR SHALL BE RETAINED BY THE OWNER AND NOT BY THE CONTRACTOR.

B. ITEMS SHALL RECEIVE SPECIAL INSPECTION BY A CERTIFIED SPECIAL INSPECTOR AS DESCRIBED BY THE PROJECT SPECIAL INSPECTION AND TESTING SCHEDULE.

Cuschieri Horton Architects
1475 S. Bascom Ave, Suite 204
Campbell, California 95008
408.371.8200 Fx 408.371.8201

BASE DESIGN
582 MARKET ST. STE. 1402
SAN FRANCISCO, CA 94104
Office:(415) 466-2997
www.BASEdesigninc.com

REGISTERED PROFESSIONAL ENGINEER KATHRYN BRIDGES No. 5732 Exp. 12/31/20 STATE OF CALIFORNIA CIVIL

GENERAL NOTES

TOWN OF LOS GATOS
ENGINEERING BUILDING TI AND STORAGE BUILDING
41 MILES AVENUE,
LOS GATOS, CA 95030

REVISIONS

NO.	ITEM	DATE
1	RESPONSE TO FIRST COMMENTS	6/4/20

PERMIT #:

SUBMITTAL:
CITY SUBMITTAL SET

DRAWN BY: SN
CHECKED BY: KMB
JOB NO:
18174 12/04/19

SHEET NO
S1.1

FOUNDATION AND FRAMING PLAN NOTES:

1. SEE SHEETS S1.0 AND S1.1 FOR GENERAL NOTES AND ABBREVIATIONS.
2. FOR TYPICAL CONCRETE DETAILS SEE SHEETS S5.0 AND S5.1.
3. SEE SHEET S8.0 FOR TYPICAL WALL FRAMING DETAILS.
4. MARKS RTU 1 INDICATE MECHANICAL UNIT AND MAXIMUM WEIGHT, SEE DRAWINGS OTHER THAN STRUCTURAL.

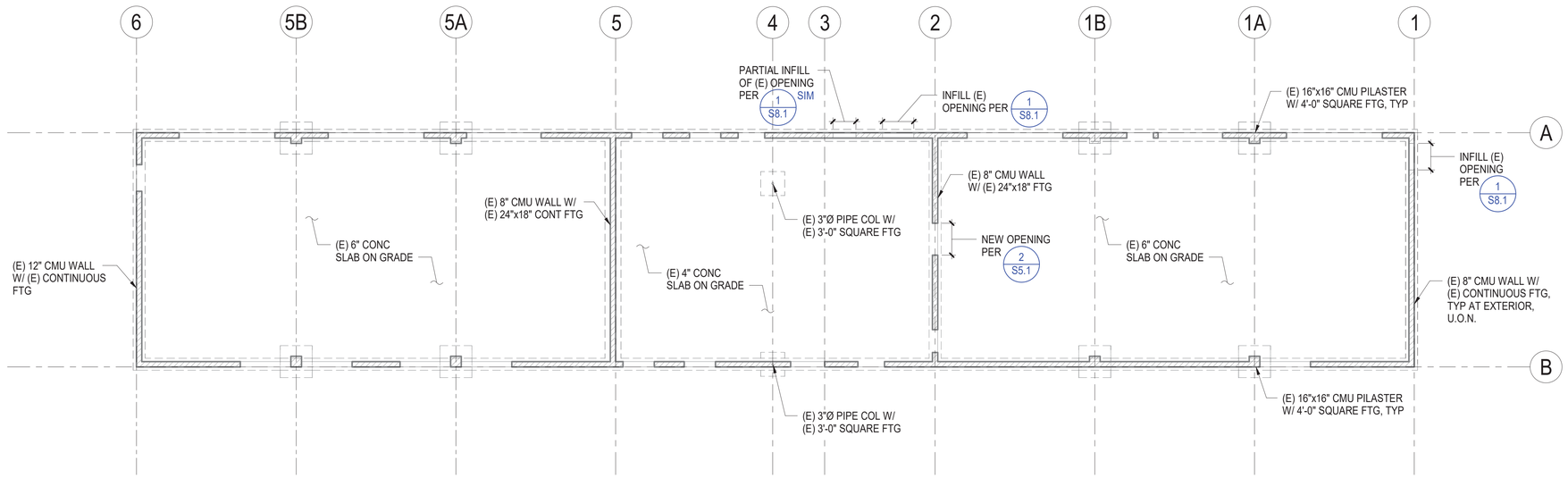

1 ENGINEERING BUILDING FOUNDATION PLAN

1/8" = 1'-0"

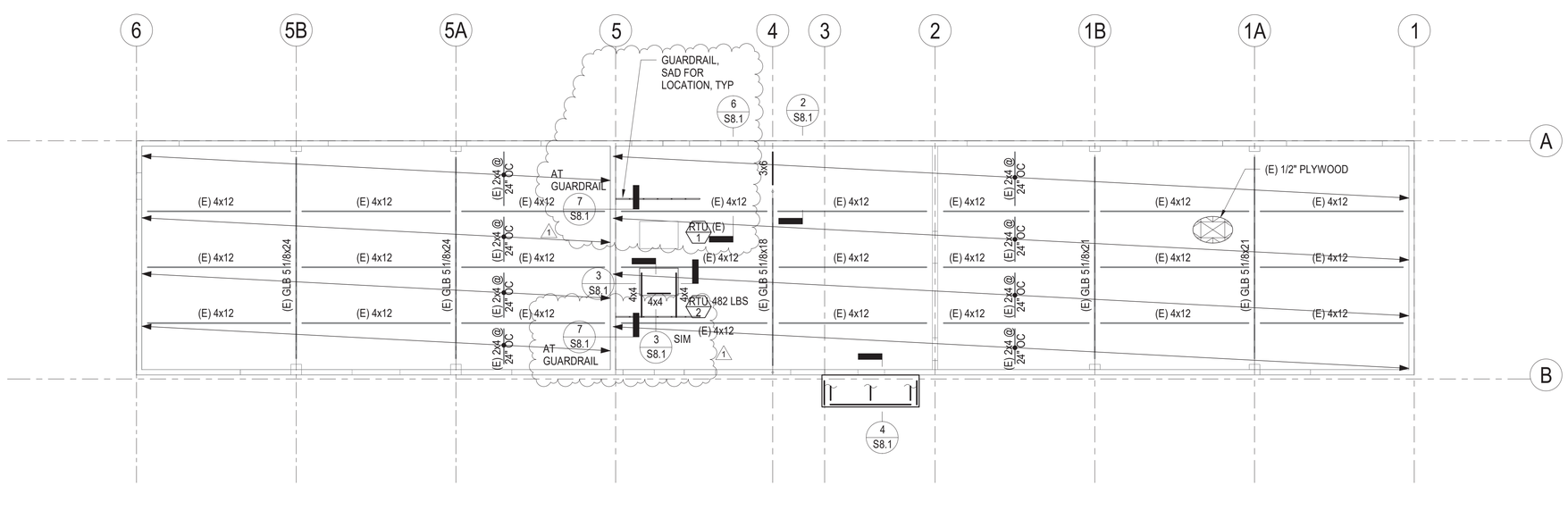

2 ENGINEERING BUILDING ROOF FRAMING PLAN

1/8" = 1'-0"

Cuschieri Horton Architects
1475 S. Bascom Ave, Suite 204
Campbell, California 95008
408.371.8200 Fx 408.371.8201

BASE DESIGN
582 MARKET ST. STE. 1402
SAN FRANCISCO, CA 94104
Office:(415) 466-2997
www.BASEdesigninc.com

REGISTERED PROFESSIONAL ENGINEER KATHRYN BRIDGES No. 5732 Exp. 12/31/20 STRUCTURAL CIVIL CALIFORNIA

ENGINEERING BUILDING FOUNDATION AND ROOF FRAMING PLANS

TOWN OF LOS GATOS
ENGINEERING BUILDING TI AND STORAGE BUILDING
41 MILES AVENUE,
LOS GATOS, CA 95030

REVISIONS

NO.	ITEM	DATE
1	RESPONSE TO FIRST COMMENTS	6/4/20

PERMIT #:

SUBMITTAL:
CITY SUBMITTAL SET

DRAWN BY: SN
CHECKED BY: KMB
JOB NO:
18174 12/04/19

SHEET NO
S2.0

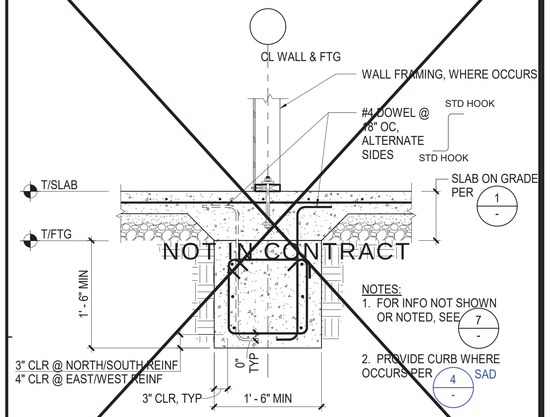

10 INTERIOR CONTINUOUS FOOTING

NTS

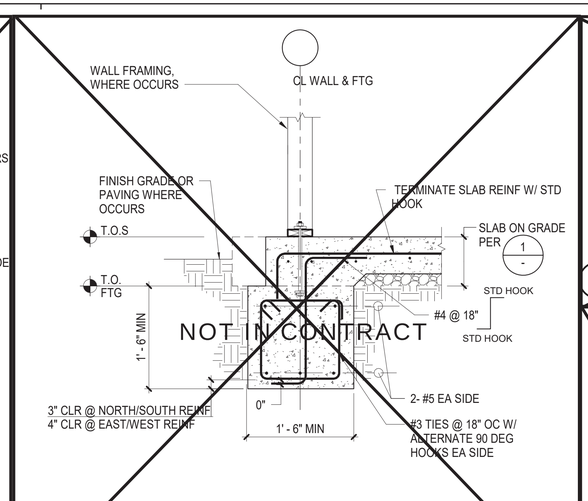

7 EXTERIOR CONTINUOUS FOOTING

NTS

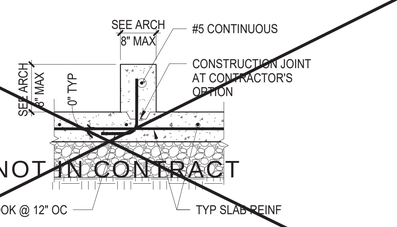

4 CURBS

NTS

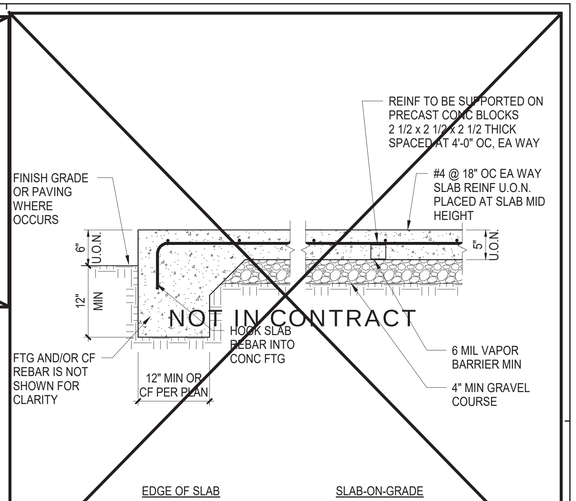

1 SLAB-ON-GRADE DETAIL

NTS

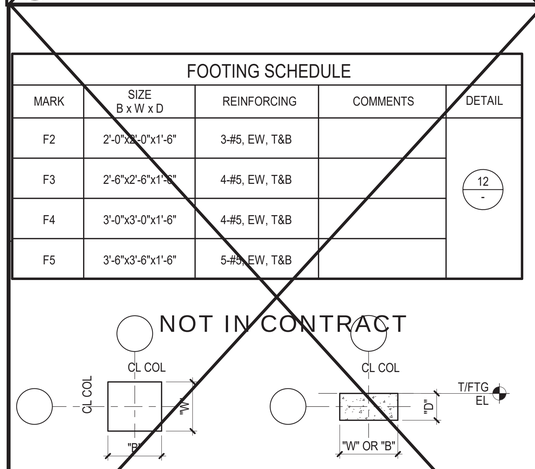

FOOTING SCHEDULE				
MARK	SIZE B x W x D	REINFORCING	COMMENTS	DETAIL
F2	2'-0"x2'-0"x1'-6"	3-#5, EW, T&B		12 -
F3	2'-6"x2'-6"x1'-6"	4-#5, EW, T&B		
F4	3'-0"x3'-0"x1'-6"	4-#5, EW, T&B		
F5	3'-6"x3'-6"x1'-6"	5-#5, EW, T&B		

11 COLUMN FOOTING SCHEDULE

NTS

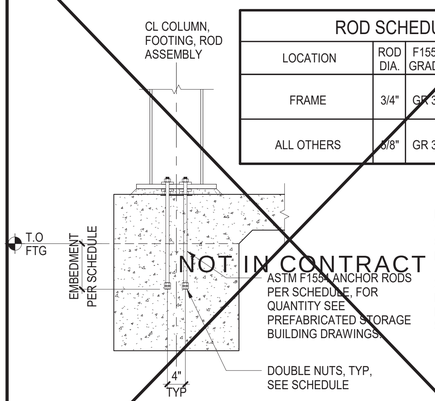

ROD SCHEDULE				
LOCATION	ROD DIA.	F1554 GRADE	DOUBLE NUTS	EMBED-MENT
FRAME	3/4"	GR 36	HEX	15"
ALL OTHERS	5/8"	GR 36	HEX	15"

NOTES:
1. SEE 12/- FOR INFO NOT NOTED OR SHOWN. CONCRETE REINFORCING NOT SHOWN FOR CLARITY.
2. BASE PLATES, STEEL COLUMNS, BASE PL GROUT, ETC ARE DESIGNED BY OTHERS. SEE PREFABRICATED STORAGE BUILDING DRAWINGS.

8 BASE PLATE ANCHOR RODS

NTS

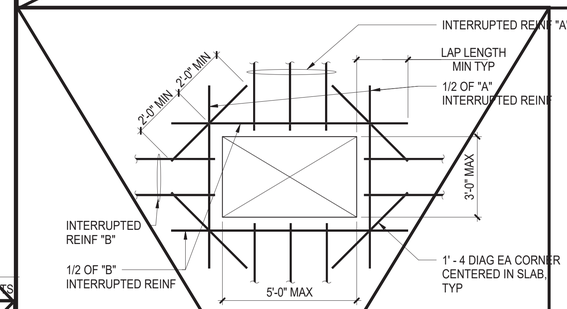

PLAN

NOTES:
1. OPENING SIZE, LOCATION, AND REINFORCING SHALL BE SUBMITTED AS PART OF THE REINFORCING SHOP DRAWING SUBMITTAL FOR REVIEW AND APPROVAL.
2. AT EACH SIDE OF THE OPENING, ADD NOT LESS THAN ONE-HALF THE AREA OF REINFORCING THAT IS INTERRUPTED BY THE OPENING. WHERE THE BAR LENGTH PAST THE OPENING IS INTERRUPTED BY AN EDGE OF SLAB, PROVIDE A STANDARD HOOK AT THE DISCONTINUOUS END.
3. WHERE THE DIAGONAL LENGTH IS INTERRUPTED BY AN EDGE OF SLAB, PROVIDE A STANDARD HOOK.
4. NOT REQUIRED AT COLUMN LOCATIONS.

5 OPENING IN SLAB-ON-GRADE

NOT IN CONTRACT

NTS

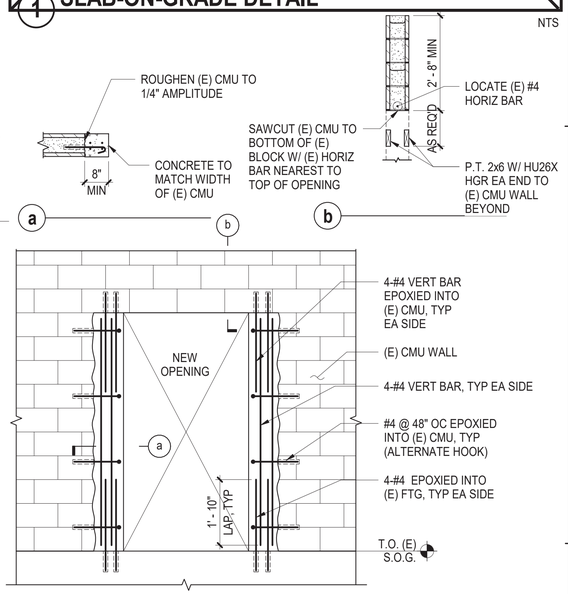

2 NEW OPENING AT (E) CMU WALL

1/2" = 1'-0"

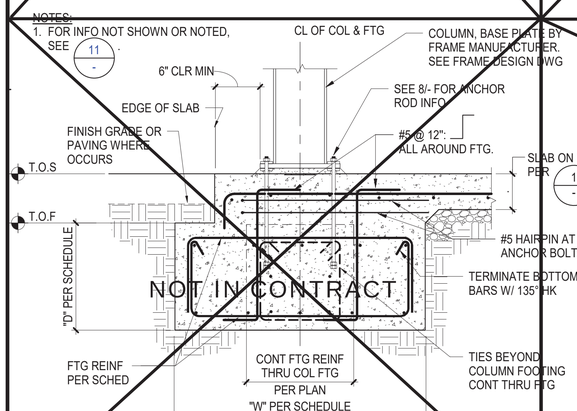

12 COLUMN FOOTING

NTS

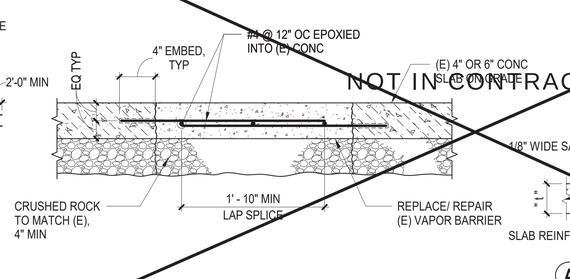

9 SLAB ON GRADE REPAIR DETAIL

1/2" = 1'-0"

D JOINT AT COLUMN

EITHER CONTROL OR CONSTRUCTION JOINTS SHALL BE LOCATED NO FURTHER THAN 36 x SLAB THICKNESS UNLESS A SMALLER SPACING IS INDICATED ON DRAWINGS. ASPECT RATIO OF ENCLOSED AREA SHALL NOT EXCEED 1.5. SUBMIT LAYOUT FOR APPROVAL. LOCATE JOINTS ON COLUMN LINES AND UNDER PARTITIONS WHEREVER POSSIBLE. MAXIMUM SLAB AREA CONTROLLED BY JOINTING IS 400 SQ FT. SAWCUTS SHALL BE MADE AS SOON AS POSSIBLE AFTER SLAB FINISHING AS MAY SAFELY BE DONE WITHOUT DISLODGING AGGREGATE OR BREAKING EDGES. FILL SAWCUT JOINT WITH SEALANT AFTER SLAB HAS CURED.

C JOINT LAYOUT

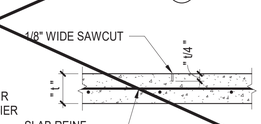

A CONTROL JOINT

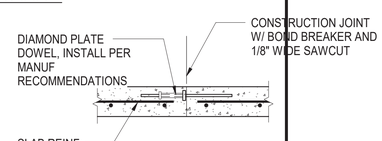

B CONSTRUCTION JOINT, SLAB-ON-GRADE ≥ 5" THICK

6 SLAB-ON-GRADE CONSTRUCTION AND CONTROL JOINTS AND SLAB BLOCKOUTS

NTS

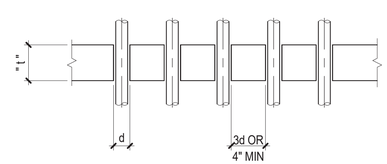

NOTES:
1. DO NOT CUT REINFORCING.
2. IF 4" MINIMUM CLEAR DISTANCE BETWEEN SLEEVES IS NOT POSSIBLE, THIS CONDITION SHALL BE TREATED AS A SLAB OPENING PER DETAIL 5 -
3. USE OF ALUMINUM CONDUIT IS PROHIBITED.

3 PIPING & CONDUIT THROUGH SLAB

NTS

Cuschieri Horton Architects
1475 S. Bascom Ave, Suite 204
Campbell, California 95008
408.371.8200 Fx 408.371.8201

BASE DESIGN
582 MARKET ST. STE. 1402
SAN FRANCISCO, CA 94104
Office:(415) 466-2997
www.BASEdesigninc.com

REGISTERED PROFESSIONAL ENGINEER KATHRYN BRIDGES No. 5732 Exp. 12/31/20 STRUCTURAL CIVIL

TYPICAL CONCRETE DETAILS

TOWN OF LOS GATOS
ENGINEERING BUILDING TI AND STORAGE BUILDING
41 MILES AVENUE,
LOS GATOS, CA 95030

REVISIONS

NO.	ITEM	DATE
1	RESPONSE TO FIRST COMMENTS	6/4/20

PERMIT #:

SUBMITTAL:
CITY SUBMITTAL SET

DRAWN BY: SN
CHECKED BY: KMB
JOB NO: 18174 12/04/19

SHEET NO
S5.1

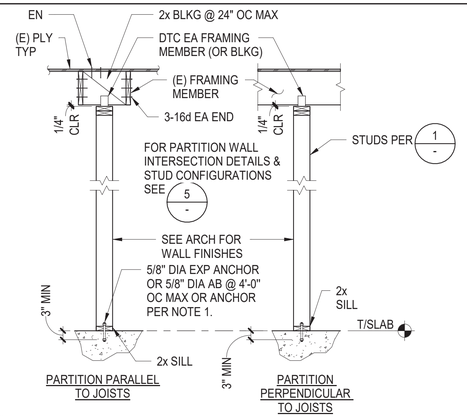

NOTES:
1. 2x SILL PLATE AT PARTITION MAY BE FASTENED TO CONC SLAB WITH POWDER ACTUATED FASTENERS @ 2'-8" O.C., PENETRATING 1-3/8" INTO CONCRETE AND SHALL BE INSTALLED PER ICC REPORT. WASHERS SHALL BE 0.059" THICK x 0.78" SQ. POWDER ACTUATED FASTENERS SHALL NOT BE PERMITTED THRU 3x SILLS, AT BEARING AND SHEAR WALLS, NOR IN CONC CURBS.
2. SEE DETAIL 1 ON THIS SHEET FOR TYPICAL WALL FRAMING. SEE DETAIL 4 ON THIS SHEET FOR FRAMING SCHEDULE AT OPENINGS.
3. FOR BRACING AT THE TOPS OF PARTITIONS THAT DO NOT EXTEND TO THE EXISTING ROOF FRAMING, SEE DETAIL 5 S8.1

7 FULL HEIGHT NON-BEARING WALL PARTITION

NTS

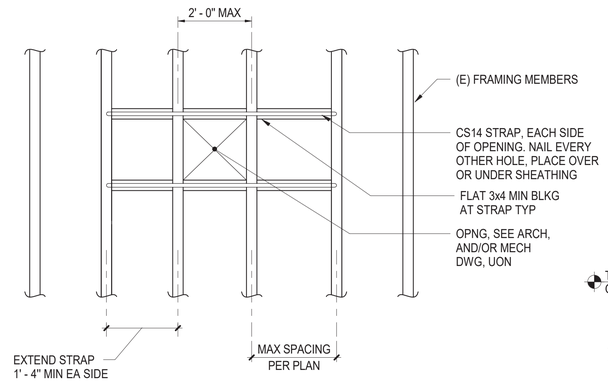

4 SMALL OPENING IN DIAPHRAGM

1/2" = 1'-0"

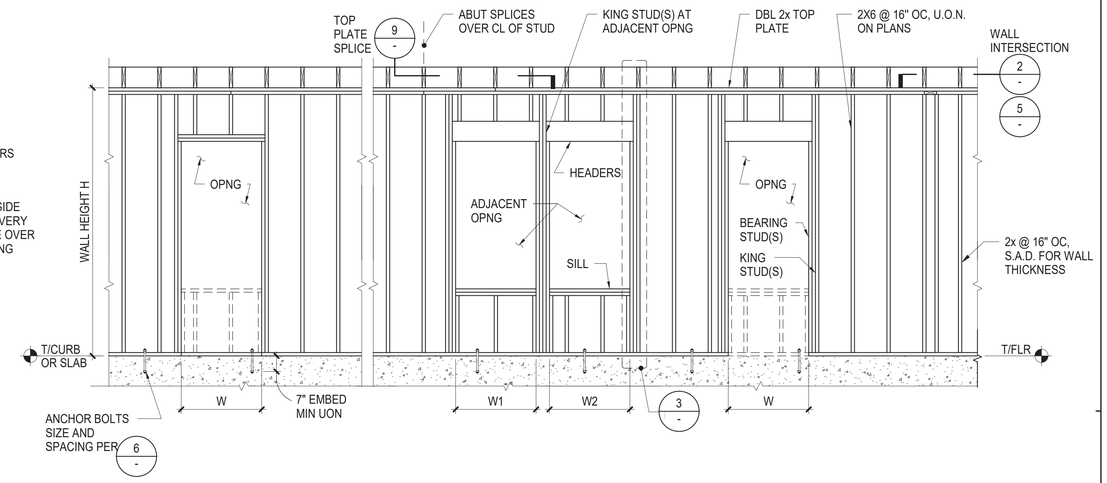

1 TYPICAL WALL FRAMING

NTS

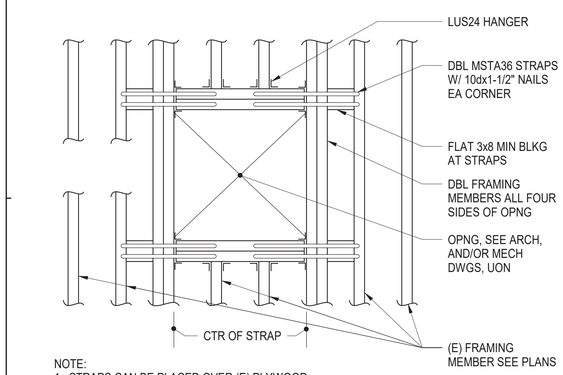

NOTE:
1. STRAPS CAN BE PLACED OVER (E) PLYWOOD.
2. FOR OPENINGS NOT SHOWN ON STRUCTURAL PLANS, NOTIFY SEOR.

8 LARGE OPENINGS IN DIAPHRAGM

1/2" = 1'-0"

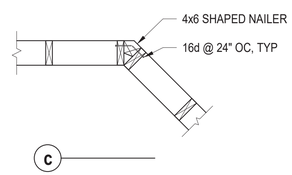

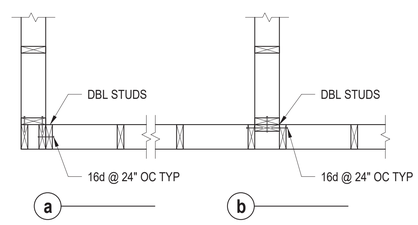

5 WALL INTERSECTIONS

NTS

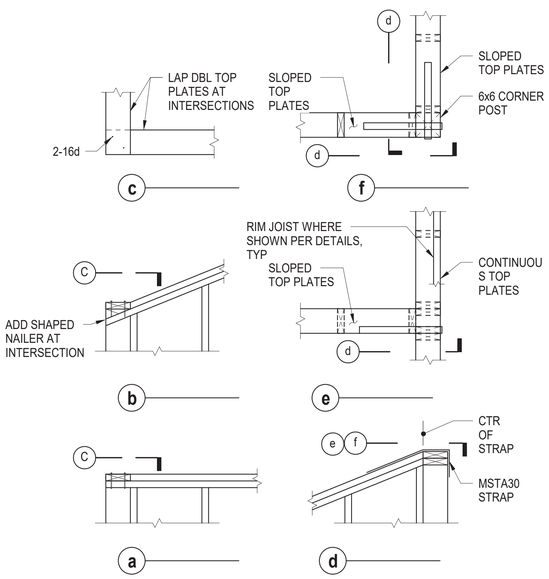

2 TOP PLATE INTERSECTIONS

NTS

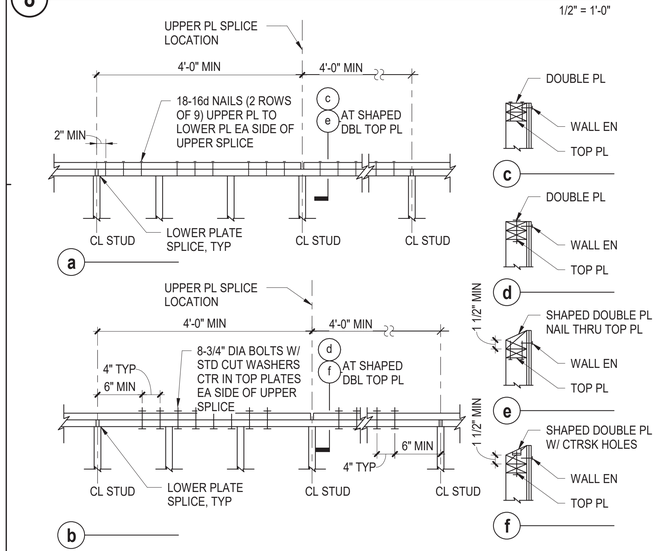

9 DOUBLE TOP PLATE SPLICE

NTS

*THE HOLE IN THE PLATE WASHER IS PERMITTED TO BE DIAGONALLY SLOTTED WITH A WIDTH UP TO 3/16" LARGER THAN THE BOLT DIAMETER AND A SLOT LENGTH NOT TO EXCEED 1 3/4", PROVIDED A STANDARD CUT WASHER IS PLACED BETWEEN THE PLATE WASHER AND THE NUT.

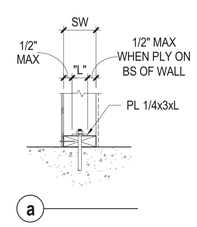

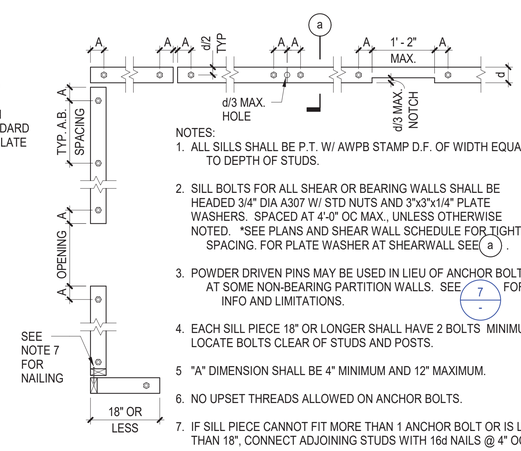

NOTES:
1. ALL SILLS SHALL BE P.T. W/ AWPB STAMP D.F. OF WIDTH EQUAL TO DEPTH OF STUDS.
2. SILL BOLTS FOR ALL SHEAR OR BEARING WALLS SHALL BE HEADED 3/4" DIA A307 W/ STD NUTS AND 3"x3"x1/4" PLATE WASHERS. SPACED AT 4'-0" OC MAX., UNLESS OTHERWISE NOTED. *SEE PLANS AND SHEAR WALL SCHEDULE FOR TIGHTER SPACING. FOR PLATE WASHER AT SHEARWALL SEE a .
3. POWDER DRIVEN PINS MAY BE USED IN LIEU OF ANCHOR BOLTS AT SOME NON-BEARING PARTITION WALLS. SEE 7 - FOR INFO AND LIMITATIONS.
4. EACH SILL PIECE 18" OR LONGER SHALL HAVE 2 BOLTS MINIMUM. LOCATE BOLTS CLEAR OF STUDS AND POSTS.
5. "A" DIMENSION SHALL BE 4" MINIMUM AND 12" MAXIMUM.
6. NO UPSET THREADS ALLOWED ON ANCHOR BOLTS.
7. IF SILL PIECE CANNOT FIT MORE THAN 1 ANCHOR BOLT OR IS LESS THAN 18", CONNECT ADJOINING STUDS WITH 16d NAILS @ 4" OC
8. RETIGHTEN ALL BOLTS PRIOR TO CLOSING IN.

6 ANCHOR BOLT AND SILL PLATE

NTS

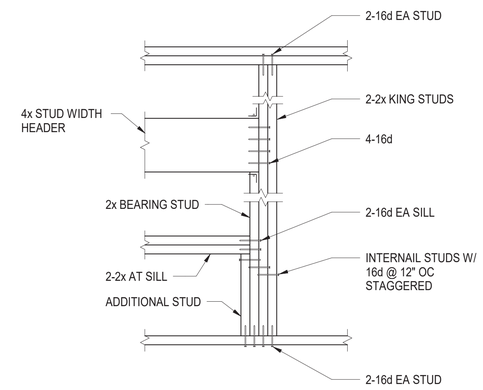

3 WALL OPENING

NTS

Cuschieri Horton Architects
1475 S. Bascom Ave, Suite 204
Campbell, California 95008
408.371.8200 Fx 408.371.8201

BASE DESIGN
582 MARKET ST. STE. 1402
SAN FRANCISCO, CA 94104
Office:(415) 466-2997
www.BASEdesigninc.com

REGISTERED PROFESSIONAL ENGINEER KATHRYN BRIDGES No. 5732 Exp. 12/31/20 STRUCTURAL CIVIL CALIFORNIA

TYPICAL WOOD FRAMING DETAILS

TOWN OF LOS GATOS
ENGINEERING BUILDING TI AND STORAGE BUILDING
41 MILES AVENUE,
LOS GATOS, CA 95030

REVISIONS

NO.	ITEM	DATE
1	RESPONSE TO FIRST COMMENTS	6/4/20

PERMIT #:

SUBMITTAL:
CITY SUBMITTAL SET
DRAWN BY: SN
CHECKED BY: KMB
JOB NO:
18174 12/04/19

SHEET NO

S8.0

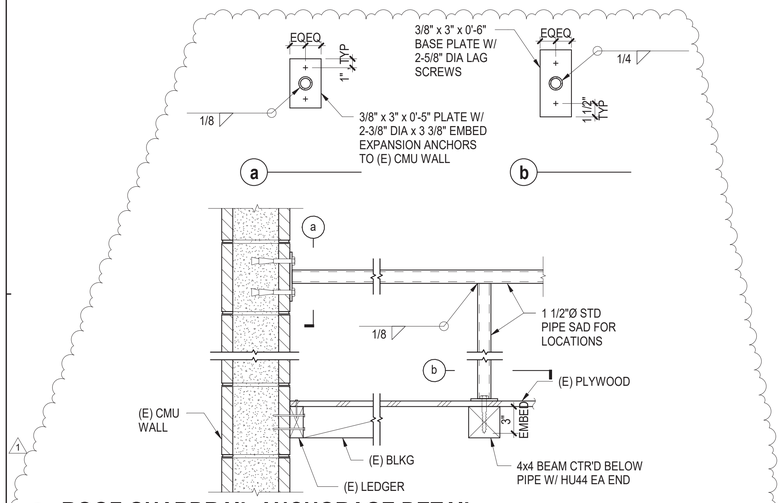

7 ROOF GUARDRAIL ANCHORAGE DETAIL

1 1/2" = 1'-0"

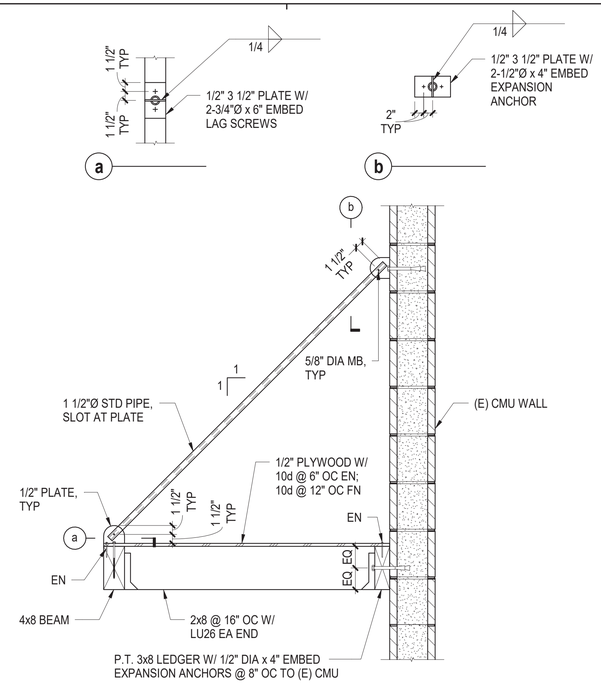

4 SECTION AT ENTRY CANOPY

1" = 1'-0"

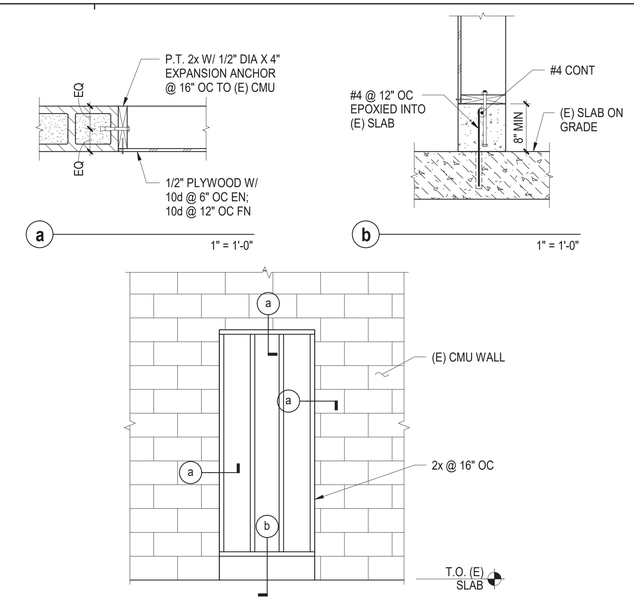

1 INFILL (E) OPENING IN (E) CMU WALL

1/2" = 1'-0"

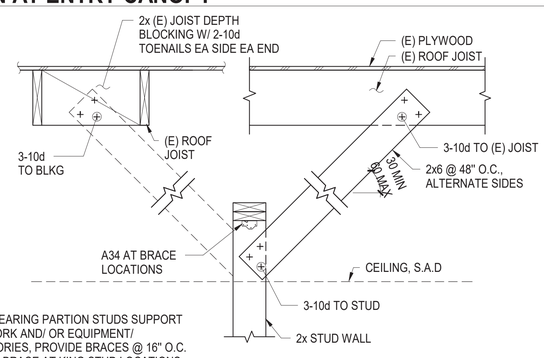

NOTES:
1. IF NON-BEARING PARTION STUDS SUPPORT CASE WORK AND/ OR EQUIPMENT/ ACCESSORIES, PROVIDE BRACES @ 16" O.C.
2. PROVIDE BRACE AT KING STUD LOCATIONS WHERE OPENINGS OCCUR.

5 ALTERNATE BRACING AT TOP OF NON-BEARING WALL PARTITIONS

1" = 1'-0"

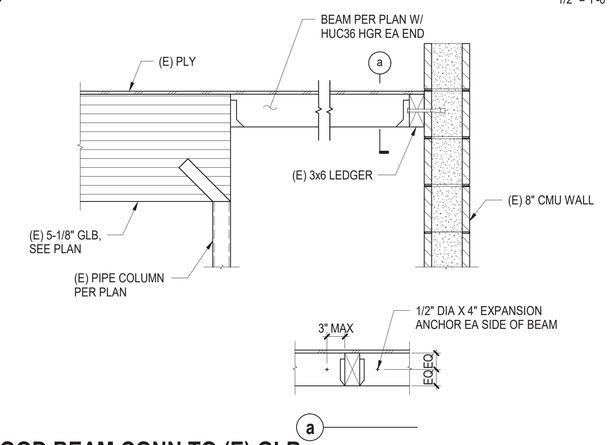

2 WOOD BEAM CONN TO (E) GLB

1" = 1'-0"

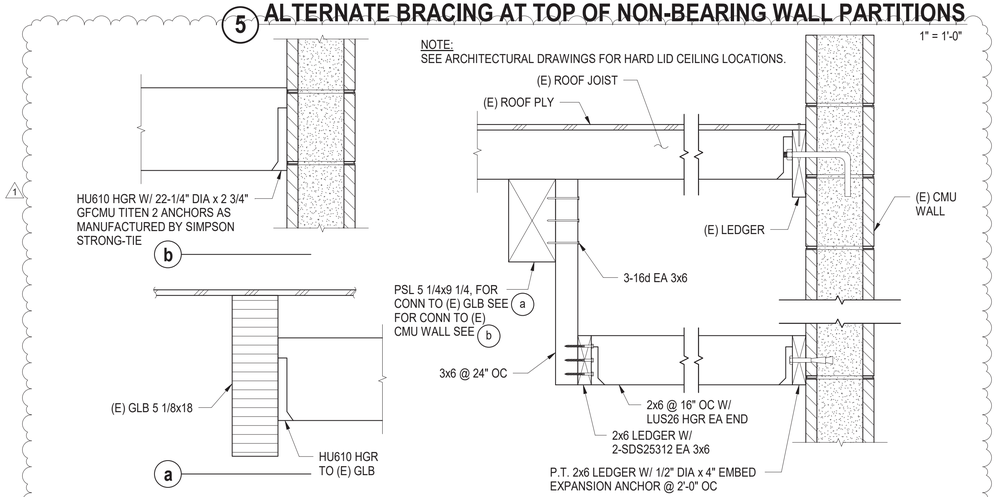

6 HARD LID CEILING FRAMING DETAIL

1 1/2" = 1'-0"

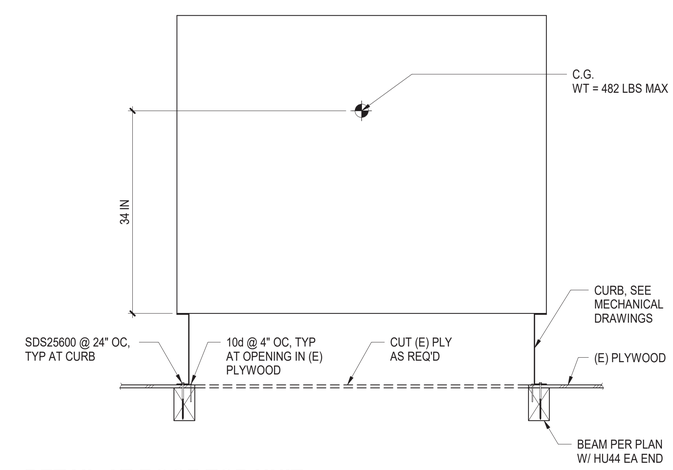

3 DETAIL AT ROOF TOP UNIT

1" = 1'-0"

Cuschieri Horton Architects
1475 S. Bascom Ave, Suite 204
Campbell, California 95008
408.371.8200 Fx 408.371.8201

BASE DESIGN
582 MARKET ST. STE. 1402
SAN FRANCISCO, CA 94104
Office:(415) 466-2997
www.BASEdesigninc.com

REGISTERED PROFESSIONAL ENGINEER KATHRYN BRIGGS No. 5732 Exp. 12/31/20 STRUCTURAL CIVIL CALIFORNIA

WOOD FRAMING DETAILS

TOWN OF LOS GATOS
ENGINEERING BUILDING TI AND STORAGE BUILDING
41 MILES AVENUE,
LOS GATOS, CA 95030

REVISIONS

NO.	ITEM	DATE
1	RESPONSE TO FIRST COMMENTS	6/4/20

PERMIT #:

SUBMITTAL:
CITY SUBMITTAL SET

DRAWN BY: SN
CHECKED BY: KMB

JOB NO:
18174 12/04/19

SHEET NO
S8.1

PACKAGED ROOFTOP UNIT SCHEDULE

EQUIP. TAG	MANUFACTURER/ MODEL #	SERVE	LOCATION	COOLING NOMINAL TONS	COOLING TOTAL MBH	COOLING SENSIBLE MBH	COOLING ENT. AIR DB, °F	COOLING ENT. AIR WB, °F	COOLING EER	COOLING SEER	COOLING IEER	AMBIENT TEMP., °F	HEATING INPUT MBH	HEATING OUTPUT MBH	HEATING AFUE %	INDOOR FAN CFM	INDOOR FAN ESP IN.WG.	INDOOR FAN BHP (HP)	COMPRESSOR LRA	COMPRESSOR RLA	ELECTRICAL DATA VOLTS	ELECTRICAL DATA PHASE	ELECTRICAL DATA FREQ. (Hz)	ELECTRICAL DATA MCA	ELECTRICAL DATA MOCP	WEIGHT (LBS.)	MIN. OUTSIDE AIR CFM	REMARKS
RTU 1	"TRANE" MODEL 4YCC4048	SEE SHEET M2.1	ROOF	4.0	46.5	35.9	80.0	67.0	11.5	14.0	-	95	70.0	-	81	1,600	-	-	130.0	19.6	208-230	1	60	32.0	50.0	448.0	370	1, 5, 6, 7
RTU 2	"TRANE" MODEL 4YCC4060	SEE SHEET M2.1	ROOF	5.0	58.0	43.5	80.0	67.0	11.5	14.0	-	95	115.0	-	81	2,000	-	-	114.2	24.4	208-230	1	60	39.1	60.0	482.0	230	1, 2, 3, 4, 5, 6, 7
~~RTU 3~~	~~"TRANE" MODEL WSC072~~		~~ROOF~~	~~6.0~~	~~78.0~~	~~58.5~~	~~80.0~~	~~67.0~~			~~13.0~~	~~95~~			~~-~~	~~2,400~~					~~208-230~~	~~3~~	~~60~~	~~32.1~~	~~50.0~~	~~-~~	~~-~~	~~8~~

NOTES:

1. GAS HEATING / ELECTRIC COOLING PACKAGE ROOFTOP UNIT.
2. DUCT SMOKE DETECTOR IN SUPPLY AIR PLENUM.
3. ECONOMIZER WITH BAROMETRIC RELIEF.
4. WALL MOUNT CO2 SENSOR.
5. UN-POWERED CONVENIENCES OUTLET.
6. NON-FUSED DISCONNECT.
7. 14-INCH ROOF CURB.
8. EXISTING ROOFTOP UNIT TO BE RE-USED (VERIFY IN FIELD).

FAN SCHEDULE

EQUIP. TAG	MANUFACTURER & MODEL	QUANTITY	SERVICE	LOCATION	AIR FLOW (CFM)	TOTAL STATIC PRESSURE (inWC)	REVOL./ MINUTE (RPM)	MOTOR HP	MOTOR WATTS	ELECTRICAL DATA V	ELECTRICAL DATA PH	ELECTRICAL DATA Hz	ELECTRICAL DATA FLA	SONES	WEIGHT (lbs)	REMARKS
EF 1	"GREENHECK" SP-B110	1	UNISEX RESTROOM 104	CEILING	100	0.25	-	-	80.0	115	1	60	-	-	10	1, 2
EF 2	"GREENHECK" SP-B110	1	UNISEX RESTROOM 105	CEILING	100	0.25	-	-	80.0	115	1	60	-	-	10	1, 2

NOTES:

1. LIGHT SWITCH CONTROLLED CEILING MOUNTED EXHAUST FAN.
2. BACK DRAFT DAMPER.

SPLIT SYSTEM SCHEDULE

EQUIP. NO.	MANUFACTURER & MODEL	QUANTITY	SERVICE	COOLING TOTAL MBH	COOLING SENSIBLE MBH	COOLING SEER	HEATING TOTAL MBH	HEATING HSPF	HEATING COP	AMBIENT TEMP., S/W °F	INDOOR FAN CFM	INDOOR FAN O.A. (CFM)	ELECTRICAL DATA V	ELECTRICAL DATA PH	ELECTRICAL DATA Hz	ELECTRICAL DATA MCA	ELECTRICAL DATA MOCP	WEIGHT (LBS.)	REFRIGERANT PIPING GAS / LIQUID (in)	MAX. LENGTH (ft)	DRAIN (in)	DIMENSIONS H X W X D (in)	REMARKS
CU 1	"MITSUBISHI" MUY-GL09NA	1	FC-1	9.0	-	21.0	-	-	-	28/93	-	-	230	1	60	7.0	15.0	81	3/8 / 1/4	65	-	21-5/8 X 31-1/2 X 11-1/4	1
FC 1	"MITSUBISHI" MSY-GL09NA	1	STORAGE 106							-	399	-	230	1	60	1.0	-	22			1-1/8	11-5/8 X 31-7/16 X 9-1/8	2, 6

NOTES:

1. DISCONNECT SWITCH
2. WIRELESS REMOTE CONTROLLER
3. CONDENSATE PUMP (230V; SI3100-230)

AIR DEVICE SCHEDULE

MARK	NECK SIZE	DIFFUSER FACE OR CEILING GRID SIZE (in)	CFM RANGE	TYPE DIFFUSER	TYPE REGISTER	TYPE GRILLE	TYPE LOUVER	MOUNTING LAY-IN	MOUNTING SURFACE	DUTY SUPPLY	DUTY RETURN	DUTY EXHAUST	DUTY TRANSFER	MANUFACTURER & MODEL NUMBER	NOTES
SD-1	8"Ø	24"X24" MODULE	100 - 225	X	-	-	-	-	X	X	-	-	-	TITUS PAS	1, 2, 3
SD-2	14"Ø	24"X24" MODULE	400	X	-	-	-	-	X	X	-	-	-	TITUS PAS	1, 2, 3
SR-1	14"X6"	14"X6"	300	-	X	-	-	-	X	X	-	-	-	TITUS S300FL	1, 2
RD-1	8"Ø	24"X24" MODULE	100 - 225	X	-	-	-	-	X	-	X	-	-	TITUS PAR	1, 2
RD-2	10"Ø	24"X24" MODULE	345 - 450	X	-	-	-	-	X	-	X	-	-	TITUS PAR	1, 2
RD-3	14"Ø	24"X24" MODULE	670	X	-	-	-	-	X	-	X	-	-	TITUS PAR	1, 2
RG-1	24"X22"	24"X22"	2,400	-	-	X	-	-	X	-	X	-	-	TITUS 350RS	1, 2

NOTES:

1. SELECTION OF THE FINISHES OF AIR DISTRIBUTION DEVICES BY INTERIOR DESIGNER/ARCHITECT.
2. CFM SHALL BE AS INDICATED ON DRAWING M2.1 AT EACH AIR DEVICE.
3. OPPOSED BLADE DAMPER.

GENERAL MECHANICAL NOTES

#	DESCRIPTION
1	CONSTRUCTION TO CONFORM WITH: - 2016 CALIFORNIA BUILDING CODE, WITH LOCAL AMENDMENTS - 2016 CALIFORNIA MECHANICAL CODE, WITH LOCAL AMENDMENTS - 2016 CALIFORNIA PLUMBING CODE. WITH LOCAL AMENDMENTS - 2016 CALIFORNIA ELECTRICAL CODE, WITH LOCAL AMENDMENTS - 2016 CALIFORNIA FIRE CODE, WITH LOCAL AMENDMENTS - 2016 CALIFORNIA ENERGY CODE, WITH LOCAL AMENDMENTS
2	ALL INDICATED DIMENSIONS ARE APPROXIMATE AND ARE GIVEN FOR ESTIMATE PURPOSES ONLY. BEFORE PROCEEDING WITH THE WORK, THIS CONTRACTOR SHALL CAREFULLY CHECK AND VERIFY ALL DIMENSIONS, SIZES AND REQUIRED CLEARANCES. CONTRACTOR SHALL AND SHALL ASSUME FULL RESPONSIBILITY FOR THE FITTING OF ALL EQUIPMENT AND MATERIALS HEREIN REQUIRED TO OTHER PARTS OF THE WORK AND TO THE WORK OF OTHER TRADES.
3	CONTRACTOR SHALL COMPLY WITH ALL CONTRACT DOCUMENTS IN LAYING OUT HIS WORK AND EQUIPMENT OR SPECIALTIES REQUIRING READING, ADJUSTMENT, INSPECTION, REPAIRS, REMOVAL OR REPLACEMENT AND SHALL BE CONVENIENTLY AND ACCESSIBLY LOCATED WITH REFERENCE TO THE FINISHED BUILDING.
4	DUCTWORK SHALL BE FABRICATED AND INSTALLED IN ACCORDANCE WITH CHAPTER 6 OF THE LATEST EDITION OF CALIFORNIA MECHANICAL CODE AND 1995 SMACNA EDITION.
5	ALL BRACING OF DUCTS AND PIPING SHALL BE INSTALLED IN ACCORDANCE WITH ``SMACNA" GUIDELINES FOR SEISMIC RESTRAINTS OF MECHANICAL AND PLUMBING SYSTEMS. WHERE BRACING DETAILS ARE NOT SHOWN ON DRAWINGS OR IN THE GUIDELINES, THE FIELD INSTALLATION SHALL BE SUBJECT TO THE APPROVAL OF THE ARCHITECT AND THE STRUCTURAL ENGINEER.
6	ALL FRESH AIR INTAKES SHALL BE LOCATED A MINIMUM OF 10'-0" FROM ANY SANITARY VENT, EXHAUST FAN DISCHARGE AND FLUE OF OTHER GAS FIRED EQUIPMENT. WHEN NECESSARY, EXTEND VENT OR PROVIDE ADDITIONAL FRESH AIR INTAKE DUCTWORK AS DIRECTED BY THE ENGINEER.
7	THE INSTALLATION OF VALVES, THERMOMETERS, GAUGES, CLEANOUTS, DAMPERS, DUCT ACCESS DOORS OR OTHER INDICATING EQUIPMENT OR SPECIALTIES REQUIRING READING, ADJUSTMENT, INSPECTION, REPAIRS, REMOVAL OR REPLACEMENT SHALL BE CONVENIENTLY AND ACCESSIBLY LOCATED.
8	WHERE ANCHORAGE DETAILS ARE NOT SHOWN ON THE DRAWINGS, THE FIELD INSTALLATION SHALL BE SUBJECT TO THE APPROVAL OF THE STRUCTURAL ENGINEER.
9	THE SIZES, WEIGHTS AND CAPACITIES OF ALL EQUIPMENT SCHEDULES ON THE DRAWING HAVE BEEN CAREFULLY COMPUTED. SHOULD EQUAL ITEMS BUT DIFFERENT MANUFACTURER'S BE SUBMITTED FOR APPROVAL, ALL SUCH SUBMITTALS SHALL INCLUDE 1/4" SCALE SHOP DRAWINGS SHOWING METHOD OF INSTALLATION. PROVIDE LOAD RATINGS AND SEISMIC CALCULATIONS AS APPROVED BY A REGISTERED STRUCTURAL ENGINEER WITH EACH SUBMITTAL.
10	REQUIRED ROUTINE MAINTENANCE ACTION SHALL BE CLEARLY STATED AND INCORPORATED ON A READILY ACCESSIBLE LABEL, WHICH MAYBE LIMITED TO IDENTIFYING BY TITLE AND/ OR PUBLICATION NUMBER THE OPERATION AND MAINTENANCE MANUAL FOR THAT PARTICULAR MODEL AND TYPE OF PRODUCT. ONE COPY OF THIS INFORMATION SHALL BE FURNISHED BY THE CONTRACTOR TO THE OWNER
11	THE CONTRACTOR SHALL COORDINATE HIS WORK WITH ALL TRADES AT THE SITE. ANY COST TO INSTALL WORK TO ACCOMPLISH SAID COORDINATION WHICH DIFFERS FROM THE WORK AS SHOWN ON THE PLANS SHALL BE INCURRED BY THE CONTRACTOR. ANY DISCREPANCIES, AMBIGUITIES OR CONFLICTS SHALL BE BROUGHT TO THE ATTENTION OF THE ARCHITECT DURING BID TIME FOR CLARIFICATION. ANY SUCH CONFLICTS NOT CLARIFIED PRIOR TO BID SHALL BE SUBJECT TO THE INTERPRETATION OF THE ARCHITECT AT NO ADDITIONAL COST TO THE OWNER.
12	AFTER ALL REQUIREMENTS OF THE SPECIFICATIONS AND/ OR THE DRAWINGS HAVE BEEN FULLY COMPLETED, REPRESENTATIVES OF THE OWNER WILL INSPECT THE WORK. THE CONTRACTOR SHALL PROVIDE COMPETENT PERSONNEL TO DEMONSTRATE THE OPERATION OF ANY ITEM OR SYSTEM, TO THE FULL SATISFACTION OF EACH REPRESENTATIVE. FINAL ACCEPTANCE OF THE WORK WILL BE MADE BY THE OWNER AFTER RECEIPT OF APPROVAL AND RECOMMENDATION OF ACCEPTANCE FROM EACH REPRESENTATIVE.
13	WHEREVER A DISCREPANCY IN QUANTITY OR SIZE OF MECHANICAL EQUIPMENT MATERIAL ARISES ON THE DRAWINGS AND/OR SPECIFICATIONS, THE CONTRACTOR SHALL BE RESPONSIBLE FOR PROVIDING AND INSTALLING ALL MATERIAL AND SERVICES REQUIRED BY THE STRICTEST CONDITIONS NOTED ON DRAWINGS AND/ OR IN THE SPECIFICATION TO ENSURE COMPLETE AND OPERABLE SYSTEMS AS REQUIRED BY THE OWNER AND ENGINEER.
14	PENETRATION OF PIPES, CONDUITS, ETC., IN WALLS REQUIRING PROTECTED OPENING SHALL BE FIRE STOPPED. FIRE STOP MATERIAL SHALL BE A U.L. TESTED AND APPROVED ASSEMBLY APPROVED BY THE STATE FIRE MARSHALL.
15	FINAL LOCATIONS OF THERMOSTAT TO BE VERIFIED WITH THE ELECTRICAL AND MECHANICAL ENGINEER AT THE JOB SITE.
16	EACH SYSTEM PROVIDING HEATING OR COOLING AIR IN EXCESS OF 2000 CFM SHALL BE EQUIPPED WITH AN AUTOMATIC SHUT-OFF. SHUT-OFF SHALL STOP THE AIR MOVING EQUIPMENT WHEN SMOKE IS DETECTED IN MAIN SUPPLY AIR DUCT SERVED BY THE SYSTEM.
17	CONTRACTOR SHALL OBTAIN AND PAY FOR ALL NECESSARY PERMITS, FEES, AND INSPECTIONS REQUIRED BY GOVERNING AUTHORITIES.
18	SMOKE DETECTORS ASSOCIATED WITH SMOKE DAMPERS AND HVAC SHUTOFFS SHALL BE TESTED BY AN APPROVED TESTING AGENCY OR A QUALIFIED THIRD PARTY SPECIAL INSPECTOR. THE SPECIAL INSPECTOR /TESTING AGENCY SHALL BE AN INDEPENDENT THIRD PARTY INDIVIDUAL OR FIRM AND SHALL NOT BE THE INSTALLING CONTRACTOR. A PROFESSIONAL ENGINEER SHALL SUBMIT A FINAL INSPECTION APPROVAL OR OCCUPANCY APPROVAL, INCLUDING CONDITIONAL OCCUPANCY APPROVAL. (UMC, 609.1 & UBC, 713).
19	ALL DUCT AND OTHER RELATED AIR DISTRIBUTION COMPONENT OPENINGS SHALL BE PROTECTED DURING STORAGE ON THE CONSTRUCTION SITE, AND SHALL BE COVERED WITH TAPE, PLASTIC, SHEET METAL OR OTHER ACCEPTABLE METHODS UNTIL THE FINAL STARTUP OF THE HEATING AND COOLING EQUIPMENT TO REDUCE THE AMOUNT OF DUST AND DEBRIS WHICH MAY COLLECT IN THE SYSTEM.

MECHANICAL LEGEND

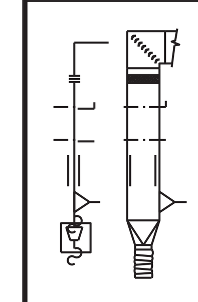

SYMBOL & ABBREVIATION		DESCRIPTION
	SA / SUP	SUPPLY AIR (RISE/DROP)
	RA/RET	RETURN AIR DUCT (RISE/DROP)
	EA/EXH	EXHAUST AIR DUCT (RISE/DROP)
	CD/SR	CEILING DIFFUSER/SUPPLY REGISTER (ARROWHEAD REPRESENTS NUMBER OF THROW)
	RR/RG	RETURN REGISTER/GRILLE
	ER/RG	EXHAUST REGISTER/GRILLE
		RECTANGULAR DUCT ELBOW WITH TURNING VANES
	FC	FLEXIBLE CONNECTION
	MVD	MANUAL VOLUME DAMPER
	FD	FIRE DAMPER
	(L)	DUCT LINING (1" THICK UNLESS OTHERWISE NOTED)
		SINGLE LINE DUCT BRANCH TAKE-OFF
		DUCT TRANSITION (RECTANGULAR TO ROUND)
	FLEX	FLEXIBLE DUCT (5'-0" MAXIMUM)
T	T-STAT	PROGRAMMABLE THERMOSTAT
— CD —	CD	CONDENSATE DRAIN
Ø	DIA.	DIAMETER
— DL —	DL	DOOR LOUVER
— UC —	UC	DOOR UNDERCUT (3/4" MINIMUM)
M		FURNISHED AND INSTALLED BY MECHANICAL CONTRACTOR
E		FURNISHED AND INSTALLED BY ELECTRICAL CONTRACTOR
M/E		FURNISHED AND INSTALLED BY MECHANICAL CONTRACTOR AND INSTALLED BY ELECTRICAL CONTRACTOR
C		CARBON DIOXIDE SENSOR
SD	SD	DUCT SMOKE DETECTOR
SD-1 / 400		AIR OUTLET/INLET DEVICE DESIGNATION (S-SUPPLY, R-RETURN, E-EXHAUST) AIR QUANTITY IN CFM
EF / -		MECHANICAL EQUIPMENT DESIGNATION DESIGNATED NUMBER
A/C, AC		AIR CONDITIONING
BDD		BACK DRAFT DAMPER
CB		CIRCUIT BREAKER
CLG.		CEILING
CONN.		CONNECT/CONNECTION
CONT.		CONTINUATION
CONT'R		CONTRACTOR
CFM		CUBIC FEET PER MINUTE
DET.		DETAIL
DISC.		DISCONNECT
DTR		DOWN THRU ROOF
EF		EXHAUST FAN
(E)		EXISTING
GA.		GAGA/GAUGE
GC		GENERAL CONTRACTOR
HVAC		HEATING, VENTILATING, AND AIR CONDITIONING
MFR.		MANUFACTUTER
MECH.		MECHANICAL
(N)		NEW
OA/OSA		OUTSIDE AIR
OBD		OPPOSED BLADE DAMPER
S/S		STAINLESS STEEL
TYP.		TYPICAL
UTR.		UP THRU ROOF

NOTE:
NOT ALL SYMBOLS AND ABBREVIATIONS ARE NECESSARILY USED IN THIS PROJECT.

MECHANICAL DRAWING SCHEDULE

#	TITLE
M0.1	LEGEND, NOTES AND EQUIPMENT SCHEDULE
M0.2	MECHANICAL SPECIFICATIONS
M0.3	TITLE 24 FORMS
M0.4	TITLE 24 FORMS
M2.1	MECHANICAL FLOOR & ROOF PLAN - ENGINEERING BLDG.
~~M2.2~~	~~MECHANICAL FLOOR PLAN - STORAGE BLDG.~~
M6.1	MECHANICAL DETAILS
M9.1	CONTROLS

Cuschieri Horton Architects
1475 S. Bascom Ave, Suite 204
Campbell, California 95008
408.371.8200 Fx 408.371.8201

ACIES ENGINEERING
3371 Olcott Street
Santa Clara, CA 95054
ph: (408) 522-5255
fx: (408) 522-5260
info@acies.net

Copyright © 2019

REGISTERED PROFESSIONAL ENGINEER
STOJAN G. REBRAÇA
No.M28498
Exp. 06/30/21
MECHANICAL
STATE OF CALIFORNIA

LEGEND, NOTES, EQUIPMENT SCHEDULE

TOWN OF LOS GATOS
ENGINEERING BUILDING TI ~~AND STORAGE BUILDING~~
41 MILES AVENUE,
LOS GATOS, CA 95030

REVISIONS

NO.	ITEM	DATE
1	RESPONSE TO FIRST REVIEW COMMENTS	07/17/20

PERMIT #:
B19-1152 & B19-1161
SUBMITTAL:
CITY SUBMITTAL SET
DRAWN BY: NS
CHECKED BY: SR
JOB NO: 1826
DATE: 12/04/19
SHEET NO.
M0.1

6/15/2020 10:13 AM

MECHANICAL SPECIFICATION

SECTION 230000 - BASIC MECHANICAL REQUIREMENTS HEATING, VENTILATION AND AIR CONDITIONING & SECTION 230593 - TESTING, ADJUSTING AND BALANCING

SECTION 230000

A — NOTE

1. DRAWINGS AND GENERAL PROVISIONS OF CONTRACT, GENERAL AND SUPPLEMENTARY CONDITIONS AND ALL OTHER INCLUDING SPECIFICATION SECTIONS, APPLY TO THIS AND OTHER SECTIONS OF DIVISION 23
2. THE CONTRACTOR FOR THIS DIVISION OF WORK IS REQUIRED TO READ THE SPECIFICATIONS AND REVIEW DRAWINGS FOR ALL DIVISIONS OF WORK AND IS RESPONSIBLE FOR THE COORDINATION OF THEIR WORK AND THE WORK OF THEIR SUBCONTRACTORS WITH ALL DIVISIONS OF WORK. IT IS THIS CONTRACTORS RESPONSIBILITY TO PROVIDE THEIR SUBCONTRACTORS WITH A COMPLETE SET OF BID DOCUMENTS
3. THIS CONTRACTOR IS RESPONSIBLE FOR SCHEDULING THE COMPLETION AND INSPECTION OF THEIR WORK AND THE WORK OF THEIR SUBCONTRACTORS TO COMPLY WITH THE SCHEDULE AND THE PROJECT COMPLETION DATE
4. THIS CONTRACTOR SHALL VISIT THE SITE PRIOR TO SUBMITTAL OF BID TO DETERMINE CONDITIONS AFFECTING THE WORK. ANY ITEMS WHICH ARE NOT COVERED IN THE BID DOCUMENTS OR ANY PROPOSED SUBSTITUTIONS SHALL BE LISTED SEPARATELY AND QUALIFIED IN THE CONTRACTORS BID. SUBMITTAL OF BID SHALL SERVE AS EVIDENCE OF KNOWLEDGE OF EXISTING CONDITIONS AND ANY MODIFICATIONS WHICH ARE REQUIRED TO MEET THE INTENT OF THE DRAWINGS AND SPECIFICATIONS. FAILURE TO VISIT THE SITE DOES NOT RELIEVE THE CONTRACTOR OF RESPONSIBILITY IN PERFORMANCE OF WORK

B — GENERAL REQUIREMENTS

1. THIS CONTRACTOR SHALL PROVIDE ALL LABOR, MATERIALS, EQUIPMENT, SERVICES, TOOLS, TRANSPORTATION, INCIDENTALS AND DETAILS NECESSARY TO PROVIDE A COMPLETE MECHANICAL SYSTEM AS SHOWN ON THE DRAWINGS, CALLED FOR IN THE SPECIFICATIONS, AND AS REQUIRED BY JOB CONDITIONS
2. THE DRAWINGS AND SPECIFICATIONS ARE INTENDED TO SUPPLEMENT EACH OTHER AND ANY MATERIAL OR LABOR CALLED FOR IN ONE SHALL BE FURNISHED AND INSTALLED EVEN THOUGH NOT SPECIFICALLY MENTIONED IN BOTH. ANY MATERIAL OR LABOR WHICH IS NEITHER SHOWN ON THE DRAWINGS NOR CALLED FOR IN THE SPECIFICATIONS, BUT WHICH IS OBVIOUSLY NECESSARY TO COMPLETE THE WORK, AND WHICH IS USUALLY INCLUDED IN WORK OF SIMILAR CHARACTER, SHALL BE FURNISHED AND INSTALLED AS PART OF CONTRACT
3. WHERE THE DRAWINGS OR SPECIFICATIONS CALL FOR ITEMS WHICH EXCEED CODE'S REQUIREMENT, THE CONTRACTOR IS RESPONSIBLE FOR FURNISHING AND INSTALLING THE SYSTEM WITH THE MORE STRINGENT REQUIREMENTS AS DESIGNED AND DESCRIBED ON THESE DRAWINGS, UNLESS SPECIFICALLY NOTED OTHERWISE
4. ALL MECHANICAL WORK SHALL BE INSTALLED SO AS TO BE READILY ACCESSIBLE FOR OPERATING, SERVICING, MAINTAINING, AND SUFFICIENT SERVICE ACCESS TO ALL EQUIPMENT. THIS CONTRACTOR IS RESPONSIBLE FOR PROVIDING REPAIRING
5. ALL WORK SHALL BE PERFORMED IN A NEAT PROFESSIONAL MANNER USING GOOD ENGINEERING AND CONSTRUCTION PRACTICES
6. UNLESS SPECIFICALLY NOTED OTHERWISE, MATERIALS, PRODUCTS, AND EQUIPMENT, INCLUDING ALL COMPONENTS THEREOF, SHALL BE UNDERWRITER'S LABORATORIES LISTED AND LABELED AND SIZED IN CONFORMITY WITH REQUIREMENTS OF STATE AND LOCAL CODES, CONFORMITY WITH REQUIREMENTS OF STATE AND LOCAL CODES, WHICHEVER IS MORE STRINGENT

C — CODES

1. ALL WORK SHALL CONFORM TO THE STATE'S, COUNTY'S, CITY'S AND LOCAL CODES AND ORDINANCES, SAFETY AND HEALTH CODES, NFPA CODES, ENERGY CODES AND ALL OTHER APPLICABLE CODES AND REQUIREMENTS. THIS CONTRACTOR SHALL INQUIRE INTO AND COMPLY WITH ALL APPLICABLE CODES, ORDINANCES, AND REGULATIONS. THIS CONTRACTOR SHALL INCLUDE ANY CHANGES REQUIRED BY CODES IN THE BID AND IF THESE CHANGES ARE NOT INCLUDED IN THE BID, THEY MUST BE QUALIFIED AS A SEPARATE LINE ITEM IN THE BID

D — LICENSES, PERMITS, INSPECTIONS & FEES

1. THIS CONTRACTOR SHALL OBTAIN AND PAY FOR ALL LICENSES, PERMITS, INSPECTIONS, AND FEES REQUIRED OR RELATED TO THEIR WORK
2. FURNISH TO THE ARCHITECT ALL CERTIFICATES OF INSPECTION AND FINAL INSPECTION APPROVAL AT COMPLETION OF PROJECT

E — TRADE NAMES, MANUFACTURERS AND SHOP DRAWINGS OF ANY UNAUTHORIZED EQUIPMENT SHALL BE SUBJECT TO REMOVAL

1. WHERE TRADE NAMES AND MANUFACTURERS ARE USED ON THE DRAWINGS OR IN THE SPECIFICATIONS, THE EXACT EQUIPMENT SHALL BE USED AS A MINIMUM FOR THE BASE BID. MANUFACTURERS CONSIDERED AS AN EQUAL OR BETTER IN ALL ASPECTS TO THAT SPECIFIED WILL BE SUBJECT TO APPROVAL IN WRITING BY THE ARCHITECT PRIOR THROUGH SHOP DRAWING SUBMITTAL PROCESS, FOR ACCEPTANCE. THE USE AND REPLACEMENT AT THE CONTRACTOR'S EXPENSE
2. MECHANICAL CONTRACTOR SHALL SUBMIT ONLY SUBSTITUTION REQUESTS TO ARCHITECT FOR APPROVAL. SUBMISSIONS SHALL BE MADE EARLY ENOUGH IN PROJECT TO ALLOW FOUR (4) WORKING DAYS FOR ARCHITECT'S REVIEW WITHOUT CAUSING DELAYS OR CONFLICTS TO THE JOB'S PROGRESS. SUBMITTALS SHALL BEAR THE STAMP OF THE SUBCONTRACTOR SHOWING THAT THEY HAVE REVIEWED AND CONFIRMED THAT THE SUBMITTALS ARE IN CONFORMANCE WITH THE CONTRACT DRAWINGS AND SPECIFICATIONS OR INDICATE WHERE EXCEPTIONS HAVE BEEN TAKEN

F — GUARANTEE

1. THIS CONTRACTOR SHALL GUARANTEE ALL MATERIALS AND WORK PROVIDED UNDER THEIR CONTRACT AND SHALL MAKE GOOD, REPAIR OR REPLACE AT THEIR OWN EXPENSE, ANY DEFECTIVE WORK, MATERIAL, OR EQUIPMENT WHICH MAY BE DISCOVERED WITHIN A PERIOD OF 12 MONTHS FROM THE DATE OF ACCEPTANCE (IN WRITING) OF THE INSTALLATION BY ARCHITECT. EXTENDED WARRANTIES ARE AS SPECIFIED WITH INDIVIDUAL EQUIPMENT
2. CONTRACTOR SHALL PROVIDE A COMPLETE 12-MONTH WARRANTY FOR ALL PARTS ON EQUIPMENT INSTALLED. THIS CONTRACTOR SHALL NOT BEAR ADDITIONAL WARRANTIES BEYOND A COMPLETE WORKING SYSTEM, AND AS SUCH, NO ADDITIONAL MONEYS SHOULD BE INCLUDED IN THE BID

G — RECORD DRAWINGS

1. THIS CONTRACTOR SHALL MAINTAIN ONE COPY OF DRAWINGS ON THE JOB SITE TO RECORD DEVIATIONS FROM CONTRACT DRAWINGS, SUCH AS:
   A. LOCATION OF CONCEALED PIPING VALVES AND DUCTS.
   B. REVISIONS, ADDENDUM, AND CHANGE ORDERS.
   C. SIGNIFICANT DEVIATIONS MADE NECESSARY BY FIELD CONDITIONS, APPROVED EQUIPMENT SUBSTITUTIONS, AND CONTRACTOR'S COORDINATION WITH OTHER TRADES
2. AT COMPLETION OF THE PROJECT AND BEFORE FINAL APPROVAL, THE CONTRACTOR SHALL MAKE ANY FINAL CORRECTIONS TO DRAWINGS AND CERTIFY THE ACCURACY OF EACH PRINT BY SIGNATURE THEREON

H — DISCREPANCIES IN DOCUMENTS

1. DRAWINGS (PLANS, SPECIFICATIONS, AND DETAILS) ARE DIAGRAMMATIC AND INDICATE THE GENERAL LOCATION AND INTENT OF THE MECHANICAL SYSTEMS. WHERE DRAWINGS, EXISTING SITE CONDITIONS, SPECIFICATIONS OR OTHER TRADES CONFLICT OR ARE UNCLEAR, ADVISE ARCHITECT, IN WRITING, OF VARIATIONS TO CONTRACT DOCUMENTS PRIOR TO SUBMISSION OF BID. OTHERWISE, ARCHITECT'S INTERPRETATION OF CONTRACT DOCUMENTS OR CONDITIONS SHALL BE FINAL WITH NO ADDITIONAL COMPENSATION PERMITTED

I — SLEEVES

1. THIS CONTRACTOR SHALL PROVIDE SLEEVES TO PROTECT EQUIPMENT OR FACILITIES IN THE INSTALLATION. EACH SLEEVE SHALL EXTEND THROUGH IT'S RESPECTIVE FLOOR, WALL OR PARTITION AND SHALL BE CUT FLUSH WITH EACH SURFACE EXCEPT SLEEVES THAT PENETRATE THE FLOOR, WHICH SHALL EXTEND 2" ABOVE THE FLOOR. CONTRACTOR MUST COORDINATE THROUGH THE ARCHITECT ANY CORE DRILLING OR CUTTING OF OPENINGS IN MASONRY FLOORS OR WALLS
2. ALL SLEEVES AND OPENINGS THROUGH FIRE RATED WALLS AND/OR FLOORS SHALL BE FIRE SEALED WITH CALCIUM SILICATE, SILICONE "RTV" FOAM, "3M" FIRE RATED SEALANT OR EQUAL, SO AS TO RETAIN THEIR FIRE RATING
3. SLEEVES IN BEARING AND MASONRY WALLS, FLOORS, AND PARTITIONS SHALL BE STANDARD WEIGHT STEEL PIPE FINISHED WITH SMOOTH EDGES. FOR OTHER THAN MASONRY PARTITIONS, THROUGH SUSPENDED CEILINGS, OR FOR CONCEALED VERTICAL PIPING, SLEEVES SHALL BE NO. 22 U.S.G. GALVANIZED STEEL MINIMUM

J — HANGERS

1. HANGERS SHALL INCLUDE ALL MISCELLANEOUS STEEL SUCH AS ANGLE IRON, BANDS, C-CLAMPS WITH RETAINING CLIPS, CHANNELS, HANGER RODS, ETC., NECESSARY FOR THE INSTALLATION OF WORK
2. HANGERS SHALL BE FASTENED TO BUILDING STEEL, CONCRETE, OR MASONRY, BUT NOT TO PIPING. HANGING FROM METAL DECK IS NOT PERMITTED. HANGERS MUST BE ATTACHED TO UPPER CHORD OF BAR JOIST. WHERE INTERFERENCE OCCUR, AND IN ORDER TO SUPPORT DUCTWORK OR PIPING, THE CONTRACTOR MUST INSTALL TRAPEZE TYPE HANGERS OR SUPPORTS WHICH SHALL BE LOCATED WHERE THEY DO NOT INTERFERE WITH ACCESS TO FIRE DAMPERS, VALVES, AND OTHER EQUIPMENT
3. HANGERS FOR ALL INSULATED PIPING SHALL BE SIZED AND INSTALLED FOR THE OUTER DIAMETER OF INSULATION. INSTALL 6" LONG SPLIT CIRCLE GALVANIZED SADDLE BETWEEN THE HANGER AND THE PIPE INSULATION
4. HANGERS AND PIPING OF DISSIMILAR METALS SHALL BE DI- ELECTRICALLY SEPARATED

K — SCOPE OF WORK

1. THIS CONTRACTOR SHALL FURNISH ALL LABOR, MATERIALS, EQUIPMENT, SERVICES, TOOLS, TRANSPORTATION AND FACILITIES NECESSARY FOR, REASONABLY IMPLIED AND INCIDENTAL TO, THE FURNISHING, INSTALLATION, COMPLETION AND TESTING OF ALL THE WORK FOR THE MECHANICAL SYSTEMS AS SHOWN ON THE DRAWINGS, CALLED FOR IN THE SPECIFICATIONS, AND AS REQUIRED BY JOB CONDITIONS, TO INCLUDE, BUT NOT BE LIMITED TO THE FOLLOWING:
   - HVAC UNITS, EQUIPMENT, AND APPURTENANCES (UNLESS NOTED OTHERWISE)
   - DUCTWORK, FITTINGS, DAMPERS, AND INSULATION
   - CURBS, ROOFING, AND STEEL FRAMING FOR SUPPORT (AS APPLICABLE, REFER TO PLANS)
   - CONDENSATE PIPING SYSTEMS (AS APPLICABLE, REFER TO PLANS)
   - TESTING, ADJUSTING, AND BALANCING.

   BEFORE STARTING WORK, THIS CONTRACTOR SHALL VISIT THE JOBSITE AND EXAMINE THE ARCHITECTURAL, STRUCTURAL, MECHANICAL AND ELECTRICAL PLANS AND SPECIFICATIONS TO SEQUENCE, COORDINATE, AND INTEGRATE THE VARIOUS ELEMENTS OF THE HVAC SYSTEM, INTERFERENCE AND CONFRONTATIONS

L — HVAC EQUIPMENT

1. PRIMARY HEATING AND AIR CONDITIONING UNITS ARE TO BE FURNISHED BY THIS CONTRACTOR AS SCHEDULED UNLESS NOTED OTHERWISE. REFER TO PLANS FOR REQUIREMENTS. ALL EQUIPMENT SHALL INCLUDE A FIVE (5) YEAR COMPRESSOR AND TEN (10) YEAR HEAT EXCHANGER WARRANTY
2. ALL EQUIPMENT SHALL BE COMPLETE IN EVERY RESPECT WITH ALL DEVICES, APPURTENANCES, AND ACCESSORIES PROVIDED TO MEET THE DESIGN INTENT AND OPERATION OF THE SYSTEMS SHOWN ON THE DRAWINGS AND SPECIFIED HEREIN
3. EQUIPMENT SHALL BE INSTALLED AND STARTUP PERFORMED IN STRICT ACCORDANCE WITH THE MANUFACTURER'S INSTRUCTIONS

M — METAL DUCTWORK - NO FIBERGLASS DUCT ALLOWED

1. NO DUCTWORK SHALL BE FABRICATED PRIOR TO JOB SITE VISIT AND APPROVAL BY THE GENERAL CONTRACTOR. A SKETCH MUST BE SUBMITTED INDICATING SIGNIFICANT DEVIATIONS FROM DESIGN AND MUST BE APPROVED BY ARCHITECT PRIOR TO FABRICATION OR INSTALLATION
2. EXCEPT AS OTHERWISE INDICATED, FABRICATE AND INSTALL RECTANGULAR AND ROUND DUCTWORK WITH GALVANIZED STEEL, IN ACCORDANCE WITH SMACNA "HVAC DUCT CONSTRUCTION STANDARDS" OF THE LATEST EDITION. WHERE OTHER CODES ARE ENFORCED, (I.E. UMC, BOCA, ETC.) USE THE MOST STRINGENT CODE FOR DUCT CONSTRUCTION STANDARDS
3. EXCEPT WHERE OTHERWISE INDICATED, CONSTRUCT DUCT SYSTEMS TO THE FOLLOWING PRESSURE CLASSIFICATIONS:
   SUPPLY DUCTS: 2" W.G., POSITIVE
   RETURN AND EXHAUST DUCTS: 2" W.G., NEGATIVE
   EXCEPT WHERE OTHERWISE INDICATED, USE DUCT SEALANT FOLLOWING PRESSURE CLASSIFICATIONS:
   SUPPLY DUCTS: CLASS B - 3" W.G.
   RETURN AND EXHAUST DUCTS: CLASS C - 2" W.G.
4. IN ACCORDANCE WITH THESE CONSTRUCTION AND SEALANT PRESSURE CLASSIFICATIONS, MAXIMUM DUCT AIR LEAKAGE WILL NOT EXCEED 5% AS REQUIRED FOR FINAL AIR BALANCE APPROVAL
5. ROUND AND FLAT OVAL DUCTWORK SHALL BE GALVANIZED STEEL WITH SPIRAL LOCK SEAM CONSTRUCTION. ROUND DUCTWORK SIZES 12" DIAMETER AND SMALLER IN CONCEALED AREAS MAY BE SNAP-LOCK CONSTRUCTION. ALL SNAP-LOCK SEAMS SHALL BE SEALED AS DESCRIBED IN THESE SPECIFICATIONS. DUCT AND FITTINGS SHALL BE G90 GALVANIZED STEEL CONFORMING TO ASTM A-653 AND A-924. ALL FITTINGS THAT ARE SPOT WELDED OR BUTTON PUNCHED CONSTRUCTION SHALL BE INTERNALLY SEALED. ROUND DUCTWORK MAY BE SPIROSAFE SELF SEALING DUCT SYSTEM AS MANUFACTURED BY LINDAB OR AN APPROVED EQUAL BY UNITED MCGILL, SEMCO OR SPIRO
6. AS A MINIMUM, CROSS BREAK ALL FLAT SURFACES OR REINFORCE WITH A BEAD APPROXIMATELY 3/8" WIDE X 3/16" DEEP ON 12" CENTERS TO PREVENT VIBRATIONS, REGARDLESS OF DUCT GAUGE
7. INSTALL FACTORY MANUFACTURED DOUBLE THICKNESS TURNING VANES IN ALL 90 DEGREE ELBOWS OVER 36" IN LENGTH. INSTALL FACTORY MANUFACTURED SINGLE THICKNESS TURNING VANES IN ALL OTHER ELBOWS
8. INSTALL RIGID ROUND AND RECTANGULAR METAL DUCT WITH SUPPORT SYSTEMS INDICATED IN SMACNA STANDARDS. SUPPORT HORIZONTAL DUCTS WITHIN 2 FEET OF EACH ELBOW AND WITHIN 4 FEET OF EACH BRANCH INTERSECTION USING DOUBLE STRAP HANGERS ON EACH SIDE OF FITTING. SUPPORT VERTICAL DUCTS AT A MAXIMUM INTERVAL OF 16 FEET AND AT EACH FLOOR. NO WOOD SHALL BE USED TO SUPPORT OR BRACE DUCTS. PROVIDE SWAY AND SEISMIC BRACING AS REQUIRED BY STATE AND LOCAL CODES
9. WHERE DUCTS PASS THROUGH ROOFS AND FLOORS, PROVIDE AS MINIMUM 1-1/2"X1-1/2" X1/8" STEEL ANGLE FRAMES AT EACH SIDE OF OPENING. THE ANNULAR SPACE BETWEEN DUCT AND ANGLE FRAMES SHALL BE CAULKED WITH SILICONE SEALANT OR FIREPROOFED AS REQUIRED BY ASSEMBLY FIRE RATING
10. ALL JOINTS AND SEAMS SHALL BE SEALED WITH 2" WIDE, GLASS-FIBER-FABRIC REINFORCED TAPE. JOINTS ALSO SHALL BE RIVETED OR CONNECTED WITH SHEET METAL SCREWS. LIQUID SEALANT BY UNITED MCGILL CORP., DOW CORNING, MIRACLE ADHESIVES AND SUREBOND INC. WILL BE ACCEPTED IN LIEU OF TAPE
11. SOFT ELASTOMER BUTYL GASKET WITH ADHESIVE BACKING SHALL BE USED TO SEAL FLANGED JOINTS
12. DUCT TRANSITIONS SHALL NOT EXCEED 30 DEGREES SLOPE EXCEPT AS SPECIFICALLY NOTED OTHERWISE.
13. PROVIDE ACCESS TO ALL MOTORIZED ZONE DAMPERS, FIRE DAMPERS, CONTROLS AND OTHER ITEMS IN DUCTWORK THAT REQUIRE SERVICE OR INSPECTION. IF THE ACCESS PANEL LOCATION IS EXPOSED MUST BE APPROVED BY ARCHITECT PRIOR TO INSTALLATION. LAY-IN SUPPLY AND RETURN AIR DIFFUSERS, GRILLES AND REGISTERS WITH PLASTER FRAMES MAY BE USED AS ACCESS LOCATIONS WHEN WITHIN 3'-0" OF DEVICE
14. WHERE DUCTWORK SIZE IS LARGER THAN CONNECTED DEVICE (I.E. DIFFUSER, REGISTER) SMOOTH DUCT TRANSITIONS ARE TO TAKE PLACE JUST PRIOR TO DEVICE CONNECTION
15. ALL KITCHEN VENTILATION DUCT INSTALLATION AND DESIGN SHALL CONFORM TO NFPA 96, CHAPTER 5 OF CMC, AND OTHER LOCAL CODE REQUIREMENTS. GREASE DUCTS SHALL BE CONSTRUCTED OF CARBON STEEL SHEET OR TYPE 304, STAINLESS STEEL. JOINTS AND SEAMS SHALL BE MADE WITH A CONTINUOUS LIQUID-TIGHT WELD OR BRAZE MADE ON THE EXTERNAL SURFACE OF THE DUCT SYSTEM. DUCT BRACING AND SUPPORTS SHALL BE MADE OF NON-COMBUSTIBLE MATERIALS. BOLTS AND OTHER MECHANICAL FASTENERS SHALL NOT PENETRATE THE DUCT WALLS
16. GREASE DUCT SYSTEMS SHALL SLOPE NOT LESS THAN 1/4 INCH PER LINEAL FOOT TOWARD THE HOOD OR TOWARD AN APPROVED GREASE RESERVOIR. WHERE HORIZONTAL DUCTS EXCEED 75 FEET IN LENGTH, THE SLOPE SHALL NOT BE LESS THAN 1 INCH PER LINEAL FOOT
17. ANY PORTION OF A GREASE DUCT SYSTEM INACCESSIBLE FROM THE DUCT ENTRY OR DISCHARGE SHALL BE PROVIDED WITH ADEQUATE CLEANOUT OPENINGS. CLEANOUT OPENINGS SHALL BE EQUIPPED WITH TIGHT-FITTING DOORS CONSTRUCTED OF STEEL HAVING A THICKNESS NOT LESS THAN THAT REQUIRED FOR THE DUCT
18. 3M FIRE RESISTIVE DUCT WRAP 615 (1-1/2" THICKNESS) OR EQUAL SHALL BE USED TO ENCLOSE THE GREASE DUCTWORK. THE ENCLOSURE SHALL BE CONSTRUCTED OF NO LESS THAN 2 LAYERS OF DUCT WRAP FIRESTOP SYSTEM MATERIAL FOR 1 OR 2 HOUR ENCLOSURE PER MANUFACTURER'S INSTALLATION INSTRUCTION. ENCLOSURE IS PERMITTED TO BE IN DIRECT CONTACT WITH COMBUSTIBLES

N — FLEXIBLE CONNECTIONS

1. FLEXIBLE COLLARS SHALL BE FURNISHED AND INSTALLED IN ALL CONNECTIONS BETWEEN VIBRATING EQUIPMENT (FANS, AIR HANDLERS, ROOFTOP UNITS, ETC.) AND DUCTS OR CASINGS. ALSO, FURNISH AND INSTALL FLEXIBLE CONNECTIONS WHERE DUCTS CROSS BUILDING EXPANSION JOINTS
2. FLEXIBLE CONNECTIONS SHALL BE CONSTRUCTED OF NEOPRENE-COATED FLAMEPROOF FABRIC. PROVIDE ADEQUATE JOINT FLEXIBILITY TO ALLOW FOR MOVEMENT AND PREVENT THE TRANSMISSION OF VIBRATION

O — FLEXIBLE AIR DUCT

1. FLEXIBLE AIR DUCT SHALL BE 1" INSULATED CLASS 1 AND RATED FOR THE OPERATING PRESSURE OF THE SYSTEM. DUCT CONSTRUCTION MATERIAL (PLASTIC, CLOTH, ALUMINUM) MUST ADHERE TO LOCAL CODES REQUIREMENTS AND BE INCLUDED AS SUCH IN THE BID
2. FLEXIBLE AIR DUCT SHALL BE ATTACHED PER DETAILS. FLEXIBLE AIRDUCT MAY ONLY BE USED IN CONCEALED VERTICAL APPLICATIONS WITHOUT PRIOR APPROVAL FROM ARCHITECT UNLESS NOTED OTHERWISE
3. FLEXIBLE DUCT SHALL NOT EXTEND OVER 5'-0" IN LENGTH AT ANY ONE LOCATION

P — SUPPLY AIR TAKE-OFF FITTINGS

1. FURNISH AND INSTALL CONICAL OR "BELL-MOUTH" TAKE-OFFS FROM MAIN DUCTWORK TO ROUND BRANCHES. INSTALL PER MANUFACTURER'S INSTRUCTIONS AND DETAILS

Q — DAMPERS

1. FURNISH AND INSTALL MANUAL LOCKING QUADRANT VOLUME CONTROL DAMPERS WITH HANDLE OPERATORS AS SHOWN ON PLANS TO FACILITATE AIR BALANCING

R — PIPING

1. CONDENSING PIPING COMPONENTS AND INSTALLATION SHALL BE CAPABLE OF WITHSTANDING WITH WORKING PRESSURE AT 350 PSI
2. CONDENSER WATER PIPING SHALL BE COPPER TYPE L, SILVER BRAZED. ENTIRE WER ASSEMBLY SHALL BE DOMESTICALLY MANUFACTURING IN THE USA

S — DUCTWORK INSULATION

1. FURNISH AND INSTALL INSULATION PRODUCTS IN ACCORDANCE WITH MANUFACTURER'S WRITTEN INSTRUCTIONS, AND IN ACCORDANCE WITH RECOGNIZED INDUSTRY PRACTICES. INSULATION MUST COMPLY WITH NFPA 90A
2. DUCTWORK SIZES SHOWN ON DRAWINGS ARE INSIDE CLEAR DIMENSIONS. INCREASE DUCTWORK SIZES AS REQUIRED FOR INTERNALLY LINED DUCTWORK TO MAINTAIN INSIDE CLEAR DIMENSIONS
3. ALL SUPPLY AND RETURN DUCTWORK WITHIN 15 FEET OF THE AC UNIT SHALL BE INTERNALLY LINED. INTERNAL LINING SHALL BE 1-INCH THICK
4. FURNISH AND INSTALL INSULATION PRODUCTS IN ACCORDANCE WITH MANUFACTURER'S WRITTEN INSTRUCTIONS, AND IN ACCORDANCE WITH RECOGNIZED INDUSTRY PRACTICES
5. INSULATE ALL OF THE FOLLOWING DUCTWORK:
   - CONCEALED SUPPLY DUCTWORK THAT IS NOT INTERNALLY LINED.
   - UNTREATED OUTSIDE AIR DUCTWORK LOCATED WITHIN THE INTERIOR.
   - EXTERIOR SUPPLY & RETURN DUCTWORK.
   - DRYER EXHAUST DUCTWORK.

   INSULATION SHALL BE 1-1/2" REINFORCED FOIL FACED, VAPOR SEALED FIBERGLASS. INSTALLED THERMAL RESISTANCE (DEG F-SQ FT-HR/BTU) SHALL BE AT LEAST 4.5 FOR INTERIOR DUCTWORK AND 6.5 FOR EXTERIOR DUCTWORK, OR AS REQUIRED BY LOCAL CODES, WHICHEVER IS MORE STRINGENT. PROVIDE EXTERIOR DUCTWORK INSULATION WITH WEATHERPROOF JACKETING
6. ALL INSULATION AND LINING SHALL HAVE A FLAME SPREAD RATING OF NOT MORE THAN 25 AND A SMOKE DEVELOPED RATING OF NO HIGHER THAT 50 WHEN TESTED IN ACCORDANCE WITH ASTM C 411, OR AS REQUIRED BY LOCAL CODES

T — CURBS AND STEEL FRAMING FOR SUPPORT

1. THIS CONTRACTOR WILL FURNISH AND INSTALL ALL NECESSARY CURBS AND BLOCKING REQUIRED TO INSTALL ALL HVAC EQUIPMENT AS DESCRIBED OR IMPLIED ON THE DRAWINGS. CURBS SHALL BE A MINIMUM OF 14" HIGH OF THE SAME MANUFACTURER OF THE EQUIPMENT SUPPORTED, UNLESS NOTED OTHERWISE. ALL CURBS MUST BE INSTALLED SO THAT TOP OF CURBS ARE "DEAD" LEVEL. COORDINATE STEEL FRAMING REQUIREMENTS, ROOF PENETRATIONS, AND ROOF FLASHING WITH GENERAL CONTRACTOR TO DETERMINE SCOPE OF WORK PRIOR TO BID. THIS CONTRACTOR MUST RECEIVE WRITTEN APPROVAL BEFORE ANY ADDITIONAL WORK TAKES PLACE

END OF SECTION 230000

SECTION 230593

A — DESCRIPTION

1. THE TESTING AND BALANCING WORK WILL BE PERFORMED UNDER A SEPARATE CONTRACT FROM THE HVAC WORK. THE WORK DESCRIBED IN THIS SECTION SHALL BE PERFORMED BY AN INDEPENDENT TEST AND BALANCE AGENCY, SPECIALIZING IN TESTING AND BALANCING OF HVAC SYSTEMS AND A NUMBER OF THE AABC OR APPROVED EQUAL ORGANIZATION

B — SCOPE OF WORK

1. HVAC SYSTEM TEST AND BALANCE IN ACCORDANCE WITH PROCEDURE ESTABLISHED BY AABC OR NEBB
2. MEASUREMENT OF FINAL OPERATING CONDITIONS OF HVAC EQUIPMENT
3. TEST AND BALANCE REPORTS
4. EACH PIECE OF AIR CONDITIONING AND HEATING EQUIPMENT AND THE AIR DISTRIBUTIONS SYSTEMS SHALL BE TESTED AND ADJUSTED TO INSURE PROPER FUNCTIONING OF ALL CONTROL, PROPER DISTRIBUTION OF AIR, MAINTENANCE OF TEMPERATURE, ELIMINATION OF DRAFTS, NOISE AND VIBRATION, AND LEFT IN THE FIRST CLASS OPERATING CONDITION. THE AIR SYSTEM SHALL BE READJUSTED IF REQUIRED FOR COMFORT OF EACH ROOM
5. THE MECHANICAL CONTRACTOR WILL MAKE ANY CHANGES IN THE PULLEYS, BELTS, DAMPERS, VANES, BAFFLES AND THE LIKE REQUIRED FOR CORRECT BALANCE OF SYSTEM AS RECOMMENDED BY T&B AGENCY AND TO THE SATISFACTION OF THE OWNER

C — SUBMITTALS

1. PROVIDE (6) SIX COPIES OF TEST AND BALANCE REPORT TO THE OWNER FOR REVIEW AND APPROVAL IN THE SOFT COVER, LETTER SIZE, 3-RING BINDER MANUAL COMPLETE WITH INDEX PAGE AND INDEXING TAGS. THE REPORT SHALL INCLUDE A SET OF REDUCED DRAWINGS WITH AIR OUTLETS AND EQUIPMENT IDENTIFIED TO CORRESPOND WITH DATA SHEETS AND INDICATING THERMOSTAT LOCATIONS
2. THE TEST AND BALANCE REPORT SHALL INCLUDE, AS A MINIMUM, BUT NOT BE LIMITED TO:
   - EACH EQUIPMENT SHALL BE IDENTIFIED BY EQUIPMENT SERVICE NUMBER, MANUFACTURER, MODEL NUMBER, AND SERIAL NUMBER, MOTOR HORSEPOWER, MOTOR NAMEPLATE VOLTAGE, MOTOR RPM, ACTUAL AND DESIGN STATIC PRESSURE, ACTUAL OUTLET VELOCITY, ACTUAL CFM, DESIGN CFM.
   - EACH COIL OUTLET SHALL BE IDENTIFIED WITH MANUFACTURE, MODEL NUMBER, SIZE, VELOCITY, CORRECTION FACTOR, ACTUAL CFM, DESIGN CFM.
   - EACH AIR OUTLET SHALL BE IDENTIFIED WITH MANUFACTURE, MODEL NUMBER, SIZE, VELOCITY, CORRECTION FACTOR, ACTUAL CFM, DESIGN CFM.
   - EACH AIR OUTLET SHALL BE IDENTIFIED WITH MANUFACTURE, MODEL NUMBER, SIZE, VELOCITY, CORRECTION FACTOR, ACTUAL CFM, DESIGN CFM.
   - TRAVERSE READING OF MAIN SUPPLY, RETURN AND OUTSIDE AIR DUCT TO ESTABLISH AIR QUANTITIES
   - TEST AND RECORD TEMPERATURES FROM TEMPERATURE CONTROLLERS SUCH AS DAY THERMOSTAT, NIGHT THERMOSTAT
   - TEST AND RECORD TEMPERATURES FROM MAIN SUPPLY AIR TRUNK, MIXED AIR DURING THE FULL HEATING AND FULL COOLING CYCLE AND ECONOMIZER CYCLE
   - TEST AND BALANCE ECONOMIZER
   - WATER BALANCE
   - EXHAUST SYSTEM BALANCE

NOT ALL SECTIONS APPLY

Cuschieri Horton Architects
1475 S. Bascom Ave, Suite 204
Campbell, California 95008
408.371.8200 Fx 408.371.8201

ACIES ENGINEERING
3371 Olcott Street
Santa Clara, CA 95054
ph: (408) 522-5255
fx: (408) 522-5260
info@acies.net

Copyright © 2019

REGISTERED PROFESSIONAL ENGINEER No.M28498 Exp. 06/30/20 MECHANICAL STATE OF CALIFORNIA

MECHANICAL SPECIFICATIONS

TOWN OF LOS GATOS
ENGINEERING BUILDING TI ~~AND STORAGE BUILDING~~
41 MILES AVENUE,
LOS GATOS, CA 95030

REVISIONS

NO.	ITEM	DATE

PERMIT #: B19-1152 & B19-1161
SUBMITTAL: CITY SUBMITTAL SET
DRAWN BY: NS
CHECKED BY: SR
JOB NO: 1826
DATE: 12/04/19
SHEET NO. M0.2

6/15/2020 10:13 AM

STATE OF CALIFORNIA
MECHANICAL SYSTEMS
CEC-NRCC-MCH-01-E (Revised 01/16) CALIFORNIA ENERGY COMMISSION

CERTIFICATE OF COMPLIANCE	NRCC-MCH-01-E
Mechanical Systems	(Page 1 of 4)
Project Name: Engineering Bldg. TI	Date Prepared: 6/2/2020

A. MECHANICAL COMPLIANCE DOCUMENTS & WORKSHEETS (check box if worksheet is included)

For detailed instructions on the use of this and all Energy Efficiency Standards compliance forms, refer to the 2016 Nonresidential Manual
Note: The Enforcement Agency may require all forms to be incorporated onto the building plans.

YES	NO	Comp. Doc./Worksheet #	Title
☑	☐	NRCC-MCH-01-E (Part 1 of 3)	Certificate of Compliance, Declaration. Required on plans for all submittals.
☑	☐	NRCC-MCH-01-E (Part 2 of 3)	Certificate of Compliance, Required Acceptance Tests (MCH-02-A to 11-A). Required on plans for all submittals.
☐	☐	NRCC-MCH-01-E (Part 3 of 3)	Certificate of Compliance, Required Acceptance Tests (MCH-12-A to 18-A). Required on plans where applicable.
☐	☑	NRCC-MCH-02-E (Part 1 of 2)	Mechanical Dry Equipment Summary is required for all submittals with Central Air Systems. It is optional on plans.
☐	☑	NRCC-MCH-02-E (Part 2 of 2)	Mechanical Wet Equipment Summary is required for all submittals with chilled water, hot water or condenser water systems. It is optional on plans.
☑	☐	NRCC-MCH-03-E	Mechanical Ventilation and Reheat is required for all submittals with multiple zone heating and cooling systems. It is optional on plans.
☐	☑	NRCC-MCH-07-E (Part 1 of 2)	Power Consumption of Fans. Required on plans where applicable
☐	☑	NRCC-MCH-07-E (Part 2 of 2)	Power Consumption of Fans, Declaration. Required on plans where applicable

STATE OF CALIFORNIA
MECHANICAL SYSTEMS
CEC-NRCC-MCH-01-E (Revised 01/16) CALIFORNIA ENERGY COMMISSION

CERTIFICATE OF COMPLIANCE	NRCC-MCH-01-E
Mechanical Systems	(Page 2 of 4)
Project Name: Engineering Bldg. TI	Date Prepared: 6/2/2020

B. MECHANICAL HVAC ACCEPTANCE FORMS (check box for required compliance documents)

Test Performed By:

Designer:
This compliance document is to be used by the designer and attached to the plans. Listed below are all the acceptance tests for HVAC systems. The designer is required to check the applicable boxes for all acceptance tests that apply and list all equipment that requires an acceptance test. All equipment of the same type that requires a test, list the equipment description and the number of systems.

Installing Contractor:
The contractor who installed the equipment is responsible to either conduct the acceptance test themselves or have a qualified entity run the test for them. If more than one person has responsibility for the acceptance testing, each person shall sign and submit the Certificate of Acceptance applicable to the portion of the construction or installation for which they are responsible.

Enforcement Agency:
Plancheck – The NRCC-MCH-01-E compliance document is not considered a completed document and is not to be accepted by the building department unless the correct boxes are checked.
Inspector - Before occupancy permit is granted all newly installed process systems must be tested to ensure proper operations.

Test Description		MCH-02-A	MCH-03-A	MCH-04-A	MCH-05-A	MCH-06-A	MCH-07-A	MCH-08-A	MCH-09-A	MCH-10-A	MCH-11-A
Equipment Requiring Testing or Verification	# of Units	Outdoor Air	Single Zone Unitary	Air Distribution Ducts	Economizer Controls	Demand Control Ventilation (DCV)	Supply Fan VAV	Valve Leakage Test	Supply Water Temp. Reset	Hydronic System Variable Flow Control	Automatic Demand Shed Control
TRANE 4YYC4(	1	☑	☑	☐	☐	☐	☐	☐	☐	☐	☐
TRANE 4YYC4(	1	☑	☑	☐	☑	☐	☐	☐	☐	☐	☐
MITSUBISHI MI	1	☑	☑	☐	☐	☐	☐	☐	☐	☐	☐
		☐	☐	☐	☐	☐	☐	☐	☐	☐	☐
		☐	☐	☐	☐	☐	☐	☐	☐	☐	☐
		☐	☐	☐	☐	☐	☐	☐	☐	☐	☐
		☐	☐	☐	☐	☐	☐	☐	☐	☐	☐
		☐	☐	☐	☐	☐	☐	☐	☐	☐	☐
		☐	☐	☐	☐	☐	☐	☐	☐	☐	☐
		☐	☐	☐	☐	☐	☐	☐	☐	☐	☐

STATE OF CALIFORNIA
MECHANICAL SYSTEMS
CEC-NRCC-MCH-01-E (Revised 01/16) CALIFORNIA ENERGY COMMISSION

CERTIFICATE OF COMPLIANCE	NRCC-MCH-01-E
Mechanical Systems	(Page 3 of 4)
Project Name: Engineering Bldg. TI	Date Prepared: 6/2/2020

C. MECHANICAL HVAC ACCEPTANCE FORMS (check box for required compliance documents)

Test Performed By:

Designer:
This compliance document is to be used by the designer and attached to the plans. Listed below are all the acceptance tests for HVAC systems. The designer is required to check the applicable boxes for all acceptance tests that apply and list all equipment that requires an acceptance test. All equipment of the same type that requires a test, list the equipment description and the number of systems.

Installing Contractor:
The contractor who installed the equipment is responsible to either conduct the acceptance test themselves or have a qualified entity run the test for them. If more than one person has responsibility for the acceptance testing, each person shall sign and submit the Certificate of Acceptance applicable to the portion of the construction or installation for which they are responsible.

Enforcement Agency:
Plancheck – The NRCC-MCH-01-E compliance document is not considered a completed document and is not to be accepted by the building department unless the correct boxes are checked.
Inspector - Before occupancy permit is granted all newly installed process systems must be tested to ensure proper operations.

Test Description		MCH-12-A	MCH-13-A	MCH-14-A	MCH-15-A	MCH-16-A	MCH-17-A	MCH-18-A
Equipment Requiring Testing or Verification	# of Units	Fault Detection & Diagnostics for DX Units	Automatic Fault Detection & Diagnostics for Air & Zone	Distributed Energy Storage DX AC Systems	Thermal Energy Storage (TES) Systems	Supply Air Temperature Reset Controls	Condenser Water Reset Controls	ECMS
TRANE 4YYC4(	1	☐	☐	☐	☐	☐	☐	☐
TRANE 4YYC4(	1	☑	☐	☐	☐	☐	☐	☐
MITSUBISHI MI	1	☐	☐	☐	☐	☐	☐	☐
		☐	☐	☐	☐	☐	☐	☐
		☐	☐	☐	☐	☐	☐	☐
		☐	☐	☐	☐	☐	☐	☐
		☐	☐	☐	☐	☐	☐	☐
		☐	☐	☐	☐	☐	☐	☐
		☐	☐	☐	☐	☐	☐	☐

STATE OF CALIFORNIA
MECHANICAL SYSTEMS
CEC-NRCC-MCH-01-E (Revised 01/16) CALIFORNIA ENERGY COMMISSION

CERTIFICATE OF COMPLIANCE	NRCC-MCH-01-E
Mechanical Systems	(Page 4 of 4)
Project Name: Engineering Bldg. TI	Date Prepared: 6/2/2020

DOCUMENTATION AUTHOR'S DECLARATION STATEMENT

1. I certify that this Certificate of Compliance documentation is accurate and complete.

Documentation Author Name:	SRDJAN REBRACA	Documentation Author Signature:	
Company:	ACIES Engineering	Signature Date:	6/2/2020
Address:	3371 OLCOTT STREET	CEA/ HERS Certification Identification (If applicable):	
City/State/Zip:	SANTA CLARA, CA 95054	Phone:	(408) 522-5255

RESPONSIBLE PERSON'S DECLARATION STATEMENT

I certify the following under penalty of perjury, under the laws of the State of California:
1. The information provided on this Certificate of Compliance is true and correct.
2. I am eligible under Division 3 of the Business and Professions Code to accept responsibility for the building design or system design identified on this Certificate of Compliance (responsible designer).
3. The energy features and performance specifications, materials, components, and manufactured devices for the building design or system design identified on this Certificate of Compliance conform to the requirements of Title 24, Part 1 and Part 6 of the California Code of Regulations.
4. The building design features or system design features identified on this Certificate of Compliance are consistent with the information provided on other applicable compliance documents, worksheets, calculations, plans and specifications submitted to the enforcement agency for approval with this building permit application.
5. I will ensure that a completed signed copy of this Certificate of Compliance shall be made available with the building permit(s) issued for the building, and made available to the enforcement agency for all applicable inspections. I understand that a completed signed copy of this Certificate of Compliance is required to be included with the documentation the builder provides to the building owner at occupancy.

Responsible Designer Name:	SRDJAN REBRACA	Responsible Designer Signature:	
Company :	ACIES ENGINEERING	Date Signed:	6/2/2020
Address:	3371 OLCOTT STREET	License:	M28498
City/State/Zip:	SANTA CLARA, CA 95054	Phone:	408.522.5255

Cuschieri Horton Architects
1475 S. Bascom Ave, Suite 204
Campbell, California 95008
408.371.8200 Fx 408.371.8201

ACIES ENGINEERING
3371 Olcott Street
Santa Clara, CA 95054
ph: (408) 522-5255
fx: (408) 522-5260
info@acies.net
Copyright © 2019

REGISTERED PROFESSIONAL ENGINEER No.M28498 Exp. 06/30/21 MECHANICAL STATE OF CALIFORNIA

TITLE 24 FORMS
ENGINEERING BLUILDING

TOWN OF LOS GATOS
ENGINEERING BUILDING TI ~~AND STORAGE BUILDING~~
41 MILES AVENUE,
LOS GATOS, CA 95030

REVISIONS

NO.	ITEM	DATE

PERMIT #:
B19-1152 & B19-1161
SUBMITTAL:
CITY SUBMITTAL SET
DRAWN BY: NS
CHECKED BY: SR
JOB NO: 1826 DATE: 12/04/19
SHEET NO.
M0.3

6/15/2020 10:13 AM

STATE OF CALIFORNIA
MECHANICAL VENTILATION AND REHEAT
CEC-NRCC-MCH-03-E (Revised 05/16) — CALIFORNIA ENERGY COMMISSION

CERTIFICATE OF COMPLIANCE	NRCC-MCH-03-E
Mechanical Ventilation & Reheat	(Page 1 of 2)
Project Name: Engineering Bldg. TI	Date Prepared: 6/2/2020

A. Mechanical Ventilation and Reheat

ACTUAL DESIGN INFO (FROM EQUIPMENT SCHEDULES, ETC)						AREA BASIS			OCCUPANCY BASIS			ROOM BASIS	MINIMUM		VAV Reheated Primary Air CFM			VAV Deadband Primary Air CFM		
01	02	03	04	05	06	07	08	09	10	11	12	13	14	15	16	17	18	19	20	21
ZONE/SYSTEM/ VAV BOX TAG	DESIGN PRIMARY COOLING AIRFLOW (CFM)	DESIGN PRIMARY DEADBAND AIRFLOW (CFM)	DESIGN PRIMARY HEATING AIRFLOW (CFM)	CNTRL TYPE DDC (Y/N)	TRANSFER AIRFLOW (CFM)	CONDITIONED AREA (ft²)	MIN CFM PER AREA	MIN CFM BY AREA	NUM. OF PEOPLE	CFM PER PERSON	MIN CFM BY OCCUPANT	MIN CFM BY ROOM	REQ'D VENT AIRFLOW (CFM)	COMPLIES?	PER-CENTAGE BASED DESIGN PRIMARY COOLING AIR (CFM)	MAXIMUM REHEAT (CFM)	COMPLIES?	% BASED DESIGN PRIMARY COOLING AIR (CFM)	MAX DEAD-BAND AIRFLOW (CFM)	COMPLIES?
RESTROOMS&						260	0.15	39	1.3	30.0	39		39	☒ Pass ☐ Fail			☐ Pass ☐ Fail ☒ N/A			☐ Pass ☐ Fail ☒ N/A
103 MAINTENA						327	0.15	49	1.6	30.0	49		49	☒ Pass ☐ Fail			☐ Pass ☐ Fail ☒ N/A			☐ Pass ☐ Fail ☒ N/A
101 MAINTENA						88	0.15	13	0.4	30.0	13		13	☒ Pass ☐ Fail			☐ Pass ☐ Fail ☒ N/A			☐ Pass ☐ Fail ☒ N/A
102 MAINTENA						88	0.15	13	0.4	30.0	13		13	☒ Pass ☐ Fail			☐ Pass ☐ Fail ☒ N/A			☐ Pass ☐ Fail ☒ N/A
108 RECEPTIO						289	0.50	144	9.6	15.0	144		144	☒ Pass ☐ Fail			☐ Pass ☐ Fail ☒ N/A			☐ Pass ☐ Fail ☒ N/A
109 MAIN CONI						222	0.50	111	7.4	15.0	111		111	☒ Pass ☐ Fail			☐ Pass ☐ Fail ☒ N/A			☐ Pass ☐ Fail ☒ N/A
											Total		370	☐ Pass ☐ Fail			☐ Pass ☐ Fail ☐ N/A			☐ Pass ☐ Fail ☐ N/A

CA Building Energy Efficiency Standards - 2016 Nonresidential Compliance — May 2016

STATE OF CALIFORNIA
MECHANICAL VENTILATION AND REHEAT
CEC-NRCC-MCH-03-E (Revised 05/16) — CALIFORNIA ENERGY COMMISSION

CERTIFICATE OF COMPLIANCE	NRCC-MCH-03-E
Mechanical Ventilation & Reheat	(Page 1 of 2)
Project Name: Engineering Bldg. TI	Date Prepared: 6/2/2020

A. Mechanical Ventilation and Reheat

ACTUAL DESIGN INFO (FROM EQUIPMENT SCHEDULES, ETC)						AREA BASIS			OCCUPANCY BASIS			ROOM BASIS	MINIMUM		VAV Reheated Primary Air CFM			VAV Deadband Primary Air CFM		
01	02	03	04	05	06	07	08	09	10	11	12	13	14	15	16	17	18	19	20	21
ZONE/SYSTEM/ VAV BOX TAG	DESIGN PRIMARY COOLING AIRFLOW (CFM)	DESIGN PRIMARY DEADBAND AIRFLOW (CFM)	DESIGN PRIMARY HEATING AIRFLOW (CFM)	CNTRL TYPE DDC (Y/N)	TRANSFER AIRFLOW (CFM)	CONDITIONED AREA (ft²)	MIN CFM PER AREA	MIN CFM BY AREA	NUM. OF PEOPLE	CFM PER PERSON	MIN CFM BY OCCUPANT	MIN CFM BY ROOM	REQ'D VENT AIRFLOW (CFM)	COMPLIES?	PER-CENTAGE BASED DESIGN PRIMARY COOLING AIR (CFM)	MAXIMUM REHEAT (CFM)	COMPLIES?	% BASED DESIGN PRIMARY COOLING AIR (CFM)	MAX DEAD-BAND AIRFLOW (CFM)	COMPLIES?
113 OPEN OFF						820	0.15	123	4.1	30.0	123		123	☒ Pass ☐ Fail			☐ Pass ☐ Fail ☒ N/A			☐ Pass ☐ Fail ☒ N/A
121 OFFICE 7						71	0.15	11	0.4	30.0	11		11	☒ Pass ☐ Fail			☐ Pass ☐ Fail ☒ N/A			☐ Pass ☐ Fail ☒ N/A
120 OFFICE 6						70	0.15	11	0.4	30.0	11		11	☒ Pass ☐ Fail			☐ Pass ☐ Fail ☒ N/A			☐ Pass ☐ Fail ☒ N/A
119 OFFICE 5						71	0.15	11	0.4	30.0	11		11	☒ Pass ☐ Fail			☐ Pass ☐ Fail ☒ N/A			☐ Pass ☐ Fail ☒ N/A
114 TRAFFIC						65	0.15	10	0.3	30.0	10		10	☒ Pass ☐ Fail			☐ Pass ☐ Fail ☒ N/A			☐ Pass ☐ Fail ☒ N/A
111 SMALL CO						94	0.50	47	3.1	15.0	47		47	☒ Pass ☐ Fail			☐ Pass ☐ Fail ☒ N/A			☐ Pass ☐ Fail ☒ N/A
112 KITCHEN/B						111	0.15	17	0.3	60.0	17		17	☒ Pass ☐ Fail			☐ Pass ☐ Fail ☒ N/A			☐ Pass ☐ Fail ☒ N/A

CA Building Energy Efficiency Standards - 2016 Nonresidential Compliance — May 2016

STATE OF CALIFORNIA
MECHANICAL VENTILATION AND REHEAT
CEC-NRCC-MCH-03-E (Revised 05/16) — CALIFORNIA ENERGY COMMISSION

CERTIFICATE OF COMPLIANCE	NRCC-MCH-03-E
Mechanical Ventilation & Reheat	(Page 1 of 2)
Project Name: Engineering Bldg. TI	Date Prepared: 6/2/2020

A. Mechanical Ventilation and Reheat

ACTUAL DESIGN INFO (FROM EQUIPMENT SCHEDULES, ETC)						AREA BASIS			OCCUPANCY BASIS			ROOM BASIS	MINIMUM		VAV Reheated Primary Air CFM			VAV Deadband Primary Air CFM		
01	02	03	04	05	06	07	08	09	10	11	12	13	14	15	16	17	18	19	20	21
ZONE/SYSTEM/ VAV BOX TAG	DESIGN PRIMARY COOLING AIRFLOW (CFM)	DESIGN PRIMARY DEADBAND AIRFLOW (CFM)	DESIGN PRIMARY HEATING AIRFLOW (CFM)	CNTRL TYPE DDC (Y/N)	TRANSFER AIRFLOW (CFM)	CONDITIONED AREA (ft²)	MIN CFM PER AREA	MIN CFM BY AREA	NUM. OF PEOPLE	CFM PER PERSON	MIN CFM BY OCCUPANT	MIN CFM BY ROOM	REQ'D VENT AIRFLOW (CFM)	COMPLIES?	PER-CENTAGE BASED DESIGN PRIMARY COOLING AIR (CFM)	MAXIMUM REHEAT (CFM)	COMPLIES?	% BASED DESIGN PRIMARY COOLING AIR (CFM)	MAX DEAD-BAND AIRFLOW (CFM)	COMPLIES?
											Total		228	☐ Pass ☐ Fail			☐ Pass ☐ Fail ☐ N/A			☐ Pass ☐ Fail ☐ N/A
106 STORAGE						41	0.15	6	0.0	150.0	6		6	☒ Pass ☐ Fail			☐ Pass ☐ Fail ☒ N/A			☐ Pass ☐ Fail ☒ N/A
											Total		6	☐ Pass ☐ Fail			☐ Pass ☐ Fail ☐ N/A			☐ Pass ☐ Fail ☐ N/A
														☐ Pass ☐ Fail			☐ Pass ☐ Fail ☐ N/A			☐ Pass ☐ Fail ☐ N/A
														☐ Pass ☐ Fail			☐ Pass ☐ Fail ☐ N/A			☐ Pass ☐ Fail ☐ N/A
														☐ Pass ☐ Fail			☐ Pass ☐ Fail ☐ N/A			☐ Pass ☐ Fail ☐ N/A
														☐ Pass ☐ Fail			☐ Pass ☐ Fail ☐ N/A			☐ Pass ☐ Fail ☐ N/A

CA Building Energy Efficiency Standards - 2016 Nonresidential Compliance — May 2016

STATE OF CALIFORNIA
MECHANICAL VENTILATION AND REHEAT
CEC-NRCC-MCH-03-E (Revised 05/16) — CALIFORNIA ENERGY COMMISSION

CERTIFICATE OF COMPLIANCE	NRCC-MCH-03-E
Mechanical Ventilation & Reheat	(Page 2 of 2)
Project Name: Engineering Bldg. TI	Date Prepared: 6/2/2020

DOCUMENTATION AUTHOR'S DECLARATION STATEMENT

1. I certify that this Certificate of Compliance documentation is accurate and complete.

Documentation Author Name:	SRDJAN REBRACA	Documentation Author Signature:	
Company:	ACIES Engineering	Signature Date:	6/2/2020
Address:	3371 OLCOTT STREET	CEA/HERS Certification Identification (If applicable):	
City/State/Zip:	SANTA CLARA, CA 95054	Phone:	408.522.5255

RESPONSIBLE PERSON'S DECLARATION STATEMENT

I certify the following under penalty of perjury, under the laws of the State of California:
1. The information provided on this Certificate of Compliance is true and correct.
2. I am eligible under Division 3 of the Business and Professions Code to accept responsibility for the building design or system design identified on this Certificate of Compliance (responsible designer).
3. The energy features and performance specifications, materials, components, and manufactured devices for the building design or system design identified on this Certificate of Compliance conform to the requirements of Title 24, Part 1 and Part 6 of the California Code of Regulations.
4. The building design feature or system design features identified on this Certificate of Compliance are consistent with the information provided on other applicable compliance documents, worksheets, calculations, plans and specifications submitted to the enforcement agency for approval with this building permit application.
5. I will ensure that a completed signed copy of this Certificate of Compliance shall be made available with the building permit(s) issued for the building, and made available to the enforcement agency for all applicable inspections. I understand that a completed signed copy of this Certificate of Compliance is required to be included with the documentation the builder provides to the building owner at occupancy.

Responsible Designer Name:	SRDJAN REBRACA	Responsible Designer Signature:	
Company:	ACIES ENGINEERING	Date Signed:	6/2/2020
Address:	3371 OLCOTT STREET	License:	M238498
City/State/Zip:	SANTA CLARA, CA 95054	Phone:	408.522.5255

CA Building Energy Efficiency Standards - 2016 Nonresidential Compliance — May 2016

Cuschieri Horton Architects
1475 S. Bascom Ave, Suite 204
Campbell, California 95008
408.371.8200 Fx 408.371.8201

ACIES ENGINEERING
3371 Olcott Street
Santa Clara, CA 95054
ph: (408) 522-5255
fx: (408) 522-5260
info@acies.net

Copyright © 2019

REGISTERED PROFESSIONAL ENGINEER No.M28498 Exp. 06/30/21 MECHANICAL STATE OF CALIFORNIA

TITLE 24 FORMS
ENGINEERING BUILDING

TOWN OF LOS GATOS
ENGINEERING BUILDING TI ~~AND STORAGE BUILDING~~
41 MILES AVENUE,
LOS GATOS, CA 95030

REVISIONS

NO.	ITEM	DATE

PERMIT #: B19-1152 & B19-1161
SUBMITTAL: CITY SUBMITTAL SET
DRAWN BY: NS
CHECKED BY: SR
JOB NO: 1826 DATE: 12/04/19

SHEET NO. M0.4

6/15/2020 10:13 AM

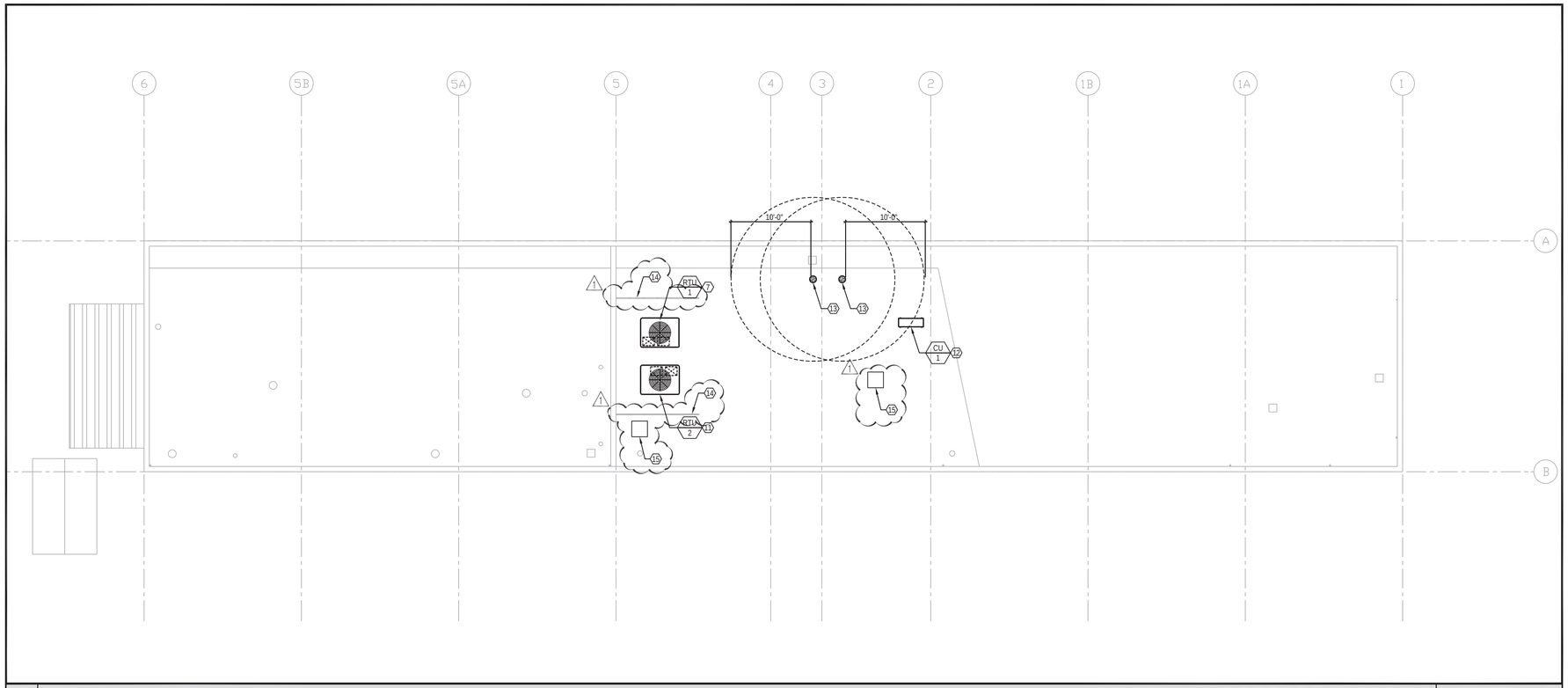

2 MECHANICAL ROOF PLAN - ENGINEERING BLDG. SCALE: 1/8" = 1'-0"

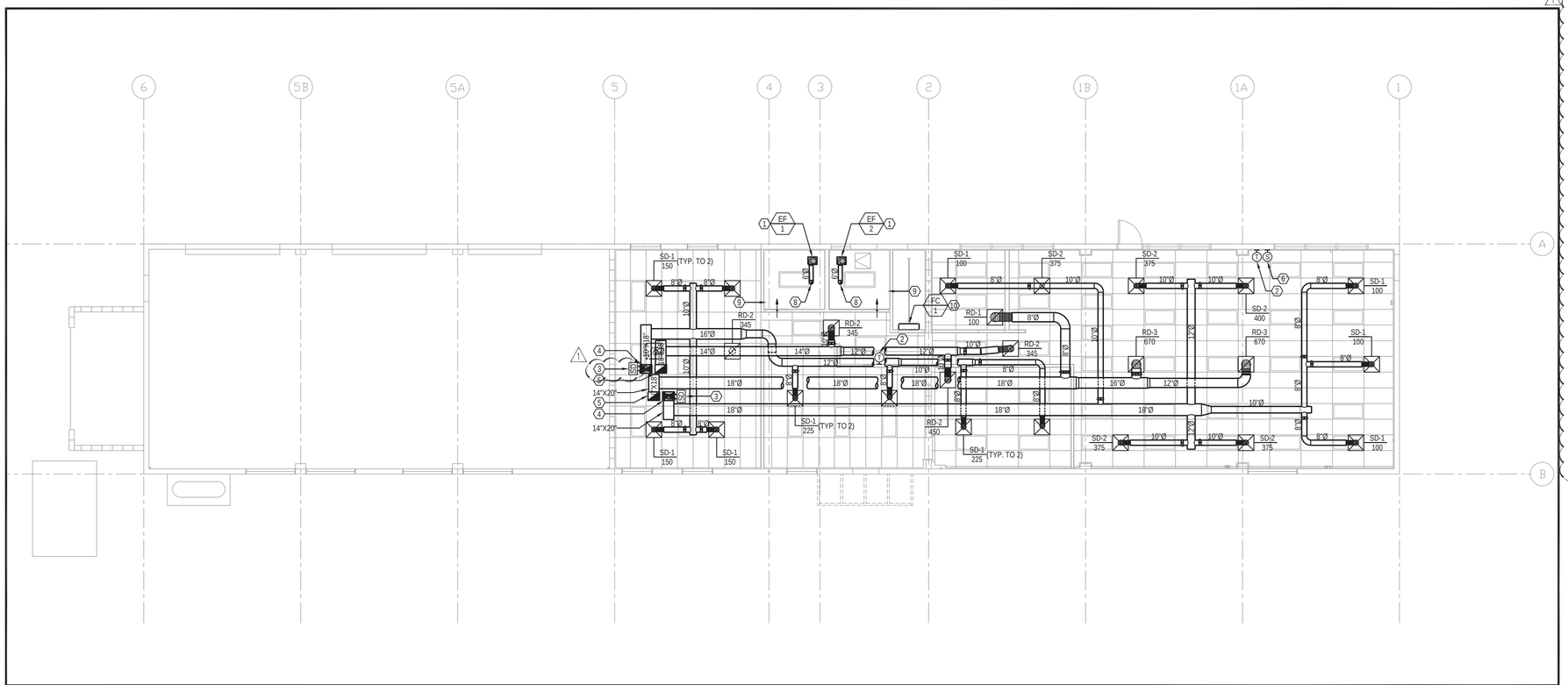

1 MECHANICAL FLOOR PLAN - ENGINEERING BLDG. SCALE: 1/8" = 1'-0"

SHEET NOTES

#	DESCRIPTION
1	CEILING MOUNTED EXHAUST FAN. SEE EQUIPMENT SCHEDULE ON SHEET M0.1.
2	THERMOSTAT 48" ABOVE FINISH FLOOR.
3	DUCT SMOKE DETECTOR TO SHUT OFF ROOFTOP UNIT UPON DETECTION OF SMOKE.
4	SUPPLY AIR PLENUM FROM ROOFTOP UNIT.
5	RETURN AIR PLENUM TO ROOFTOP UNIT.
6	WALL MOUNTED CO2 SENSOR.
7	EXISTING ROOFTOP UNIT TO BE RE-USED (VERIFY IN FIELD).
8	6"Ø EXHAUST AIR DUCT UP TO ROOF JACK.
9	1/4" DOOR UNDERCUT.
10	MINI-SPLIT FAN COIL UNIT. SEE EQUIPMENT SCHEDULE ON SHEET M0.1.
11	CURB MOUNTED GAS HEATING / ELECTRIC COOLING ROOFTOP UNIT. SEE EQUIPMENT SCHEDULE ON SHEET M0.1.
12	CONDENSING UNIT, SEE EQUIPMENT SCHEDULE ON SHEET M0.1.
13	ROOF JACK
14	SAFETY RAILING, FOR DETAIL SEE STRUCTURAL DRAWINGS.
15	EXISTING EXHAUST TO REMAIN (VERIFY IN FIELD).

DUCT SIZING METHOD

THE HEATING AND COOLING DUCTWORK SYSTEM FOR THIS PROJECT WERE SIZED USING TRANES' VARITRANE DUCT DESIGN SOFTWARE. THIS DUCT SIZING SOFTWARE IS BASED ON THE DUCT SIZING PROCEDURES AS OUTLINED IN ASHRAE "FUNDAMENTAL HANDBOOK" - CHAPTER 21 - DUCT DESIGN .

CERTIFIED BY:

SRDJAN REBRACA, P.E.

REGISTERED PROFESSIONAL ENGINEER SRDJAN G. REBRACA No.M28498 Exp. 06/30/21 MECHANICAL STATE OF CALIFORNIA

AIR BALANCE TABLE

EQUIP. TAG	AREA SERVED	SUPPLY AIR (CFM)	RETURN AIR (CFM)	OUTSIDE AIR (CFM)	EXHAUST AIR (CFM)	PRESSURE
RTU 1	OFFICE	1,600	1,130	370	-	-
RTU 2	OFFICE	2,000	1,670	230	-	-
EF 1	UNISEX RESTROOM	-	-	-	- 100	-
EF 2	UNISEX RESTROOM	-	-	-	- 100	-
					TOTAL EXHAUST	- 200
					MAKE-UP AIR SUPPLIED FROM RTU-1 & RTU-2	200
					BUILDING INFILTRATION / EXFILTRATION	0

MECHANICAL NOTES

#	DESCRIPTION
1	MECHANICAL CONTRACTOR IS REQUIRED TO VISIT THE PROJECT SITE AND VERIFY EXISTING CONDITION OF THE MECHANICAL SYSTEM BEFORE SUBMITTING BIDS. ANY QUESTION REGARDING THE EXISTING MECHANICAL SYSTEM SHALL BE BROUGHT TO THE ATTENTION OF THE ARCHITECT/ENGINEER IN THE FORM OF RFI.
2	THIS MECHANICAL PLAN IS DIAGRAMMATIC IN NATURE. MECHANICAL CONTRACTOR TO ENSURE MECHANICAL SYSTEM FITS WITHIN THE AVAILABLE CEILING SPACE. ANY DISCREPANCIES NOTED BETWEEN THE MECHANICAL SYSTEM AND THE AVAILABLE CEILING SPACE SHALL BE BROUGHT TO THE ATTENTION OF THE ARCHITEC/ENGINEER IN THE FORM OF RFI.
3	THERE ARE NO MECHANICAL AS-BUILT DRAWINGS AVAILABLE FOR THIS SPACE. THE INTENT IS TO RE-USE THE EXISTING SUPPLY AND RETURN AIR DUCTS AS MUCH AS POSSIBLE WITH SOME MODIFICATIONS. MECHANICAL CONTRACTOR TO VERIFY EXISTING DUCTWORK CONDITION ONCE THE EXISTING CEILING IS DEMOLISHED AND ADVISE THE MECHANICAL ENGINEER OF ANY DISCREPANCIES AGAINST THE PLANS. MECHANICAL ENGINEER WILL REVISE THE PLANS ACCORDINGLY BASED FROM THE INFORMATION THAT WILL BE PROVIDED BY THE MECHANICAL CONTRACTOR.

Cuschieri Horton Architects
1475 S. Bascom Ave, Suite 204
Campbell, California 95008
408.371.8200 Fx 408.371.8201

ACIES ENGINEERING
3371 Olcott Street
Santa Clara, CA 95054
ph: (408) 522-5255
fx: (408) 522-5260
info@acies.net

Copyright © 2019

REGISTERED PROFESSIONAL ENGINEER SRDJAN G. REBRACA No.M28498 Exp. 06/30/21 MECHANICAL STATE OF CALIFORNIA

MECHANICAL FLOOR & ROOF PLANS
ENGINEERING BLDG.

TOWN OF LOS GATOS
ENGINEERING BUILDING TI ~~AND STORAGE BUILDING~~
41 MILES AVENUE,
LOS GATOS, CA 95030

REVISIONS

NO.	ITEM	DATE
1	RESPONSE TO FIRST REVIEW COMMENTS	07/17/20

PERMIT #: B19-1152 & B19-1161
SUBMITTAL: CITY SUBMITTAL SET
DRAWN BY: NS
CHECKED BY: SR
JOB NO: 1826
DATE: 12/04/19

SHEET NO. M2.1

6/15/2020 10:14 AM

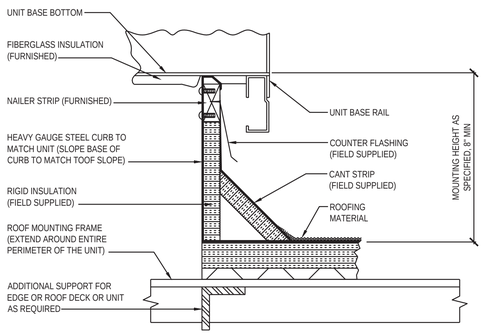

6 ROOFTOP UNIT CURB DETAIL NTS

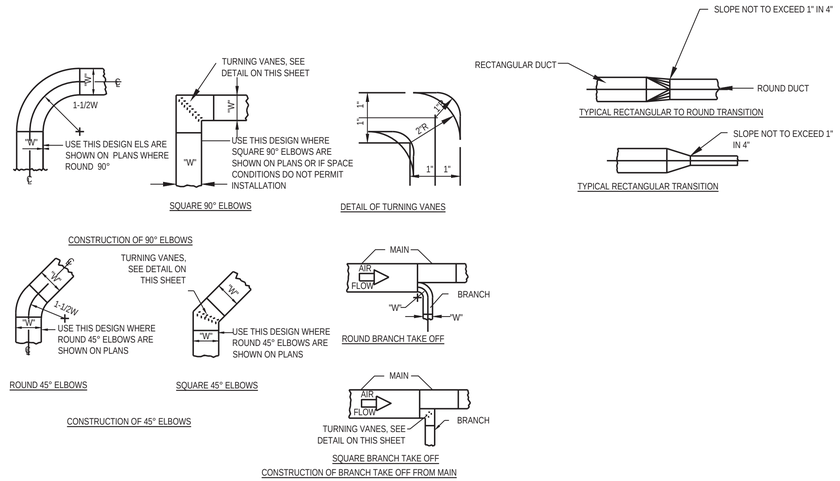

INSTALLATION NOTES

1. ALL DUCTS SHALL BE CONSTRUCTED AND ERECTED IN A NEAT AND WORKMANLIKE MANNER.
2. DUCT SHALL BE CONSTRUCTED OF THE WEIGHTS, GAGES AND MATERIAL SHOWN IN THE SCHEDULE ON THESE DRAWINGS.
3. THE DIMENSIONS SHOWN FOR ALL DUCTS SHOWN IN PLAN GIVE THE WIDTH FIRST AND THEN THE HEIGHT.
4. DUCT RISERS SHOULD BE SUPPORTED BY ANGLES AT EVERY FLOOR.
5. AIR TURN SHALL BE INSTALLED IN ALL ABRUPT ELBOWS TO PREVENT TURBULENCE.
6. DUCTS SHALL BE SECURELY ATTACHED TO THE BUILDING CONSTRUCTION IN AN APPROVED MANNER.
7. DIVERGING TRANSITION PIECES SHALL BE MADE AS GRADUAL AS POSSIBLE.

   INSTALL FIRE DAMPERS IN ACCORDANCE WITH UL 555.
8. ACCESS PANELS SHOULD BE PLACED BEFORE AND/OR AFTER EQUIPMENT INSTALLED IN THE DUCT.
9. DUCT AREA SHOULD NOT BE DECREASED MORE THAN 10% WHEN OBSTRUCTIONS CANNOT BE AVOIDED, AND THEN A STREAMLINED FITTING SHOULD BE USED.
10. FLEXIBLE FABRIC CONNECTIONS (OR EQUAL) SHOULD BE USED ON BOTH INLETS AND OUTLETS OF ALL FANS AND AIR HANDLING UNITS.
11. JOINTS AND SEAMS OF SUPPLY DUCTS SHALL BE FASTENED SECURELY AND MADE AIR TIGHT.

1 DUCT CONSTRUCTION DETAILS NTS

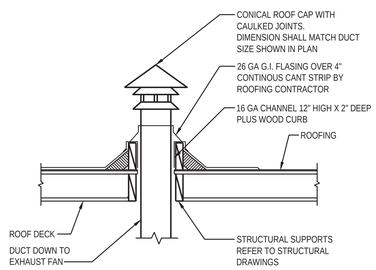

7 ROOF JACK DETAIL NTS

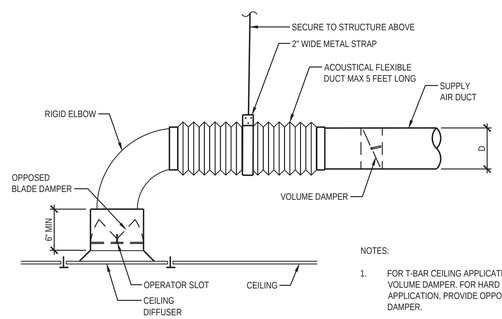

NOTES:

1. FOR T-BAR CEILING APPLICATION' PROVIDE VOLUME DAMPER. FOR HARD CEILING APPLICATION, PROVIDE OPPOSED BLADE DAMPER.
2. IN LIEU OF ABOVE DETAIL, METAL PLENUM MAY BE USED TO CONNECT THE BRANCH DUCT TO THE DIFFUSERS.

4 CEILING DIFFUSER DETAIL NTS

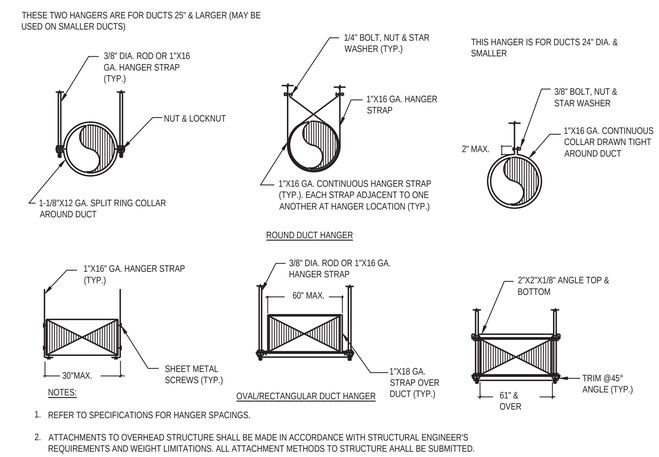

NOTES:

1. REFER TO SPECIFICATIONS FOR HANGER SPACINGS.
2. ATTACHMENTS TO OVERHEAD STRUCTURE SHALL BE MADE IN ACCORDANCE WITH STRUCTURAL ENGINEER'S REQUIREMENTS AND WEIGHT LIMITATIONS. ALL ATTACHMENT METHODS TO STRUCTURE AHALL BE SUBMITTED.

2 DUCT SUPPORT DETAILS NTS

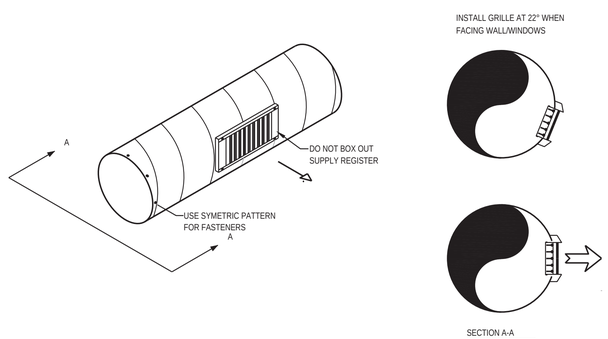

8 DUCT MOUNT GRILLE DETAIL NTS

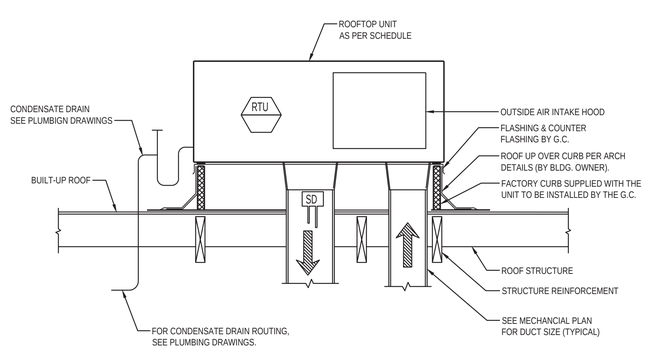

5 ROOFTOP UNIT DETAIL NTS

DUCT CONSTRUCTION MINIMUM SHEET METAL THICKNESSES

RECTANGULAR DUCTS

MAXIMUM SIZE (INCHES)	STEEL (MINIMUM THICKNESS, NOMINAL)	ALUMINUM (MINIMUM THICKNESS, NOMINAL)
THROUGH 12	0.022 INCH (25 GAGE, GALVANIZED)	0.022 INCH (NO. 24 B&S GAGE)
13 THROUGH 30	0.028 INCH (24 GAGE, GALVANIZED)	0.025 INCH (NO. 22 B&S GAGE)
31 THROUGH 54	0.034 INCH (22 GAGE, GALVANIZED)	0.033 INCH (NO. 20 B&S GAGE)
55 THROUGH 84	0.040 INCH (20 GAGE, GALVANIZED)	0.040 INCH (NO. 18 B&S GAGE)
OVER 84	0.052 INCH (18 GAGE, GALVANIZED)	0.051 INCH (NO. 16 B&S GAGE)

ROUND DUCTS

MAXIMUM SIZE (INCHES)	SPIRAL SEAM DUCT	LONGITUDINAL SEAM DUCT	FITTINGS
	STEEL (MINIMUM THICKNESS, NOMINAL)	STEEL (MINIMUM THICKNESS, NOMINAL)	STEEL (MINIMUM THICKNESS, NOMINAL)
THROUGH 12	0.019 INCH (28 GAGE, GALVANIZED)	0.022 INCH (26 GAGE, GALVANIZED)	0.022 INCH (26 GAGE, GALVANIZED)
13 THROUGH 18	0.022 INCH (26 GAGE, GALVANIZED)	0.028 INCH (24 GAGE, GALVANIZED)	0.028 INCH (24 GAGE, GALVANIZED)
19 THROUGH 28	0.038 INCH (24 GAGE, GALVANIZED)	0.034 INCH (22 GAGE, GALVANIZED)	0.034 INCH (22 GAGE, GALVANIZED)
29 THROUGH 36	0.024 INCH (22 GAGE, GALVANIZED)	0.040 INCH (20 GAGE, GALVANIZED)	0.040 INCH (20 GAGE, GALVANIZED)
37 THROUGH 52	0.040 INCH (20 GAGE, GALVANI ZED)	0.052 INCH (18 GAGE, GALVANIZED)	0.052 INCH (18 GAGE, GALVANIZED)

3 SHEET METAL GAGES NTS

Cuschieri Horton Architects
1475 S. Bascom Ave, Suite 204
Campbell, California 95008
408.371.8200 Fx 408.371.8201

ACIES ENGINEERING
3371 Olcott Street
Santa Clara, CA 95054
ph: (408) 522-5255
fx: (408) 522-5260
info@acies.net

Copyright © 2019

REGISTERED PROFESSIONAL ENGINEER No.M28498 Exp. 06/30/21 MECHANICAL STATE OF CALIFORNIA

MECHANICAL DETAILS

TOWN OF LOS GATOS
ENGINEERING BUILDING TI ~~AND STORAGE~~ BUILDING
41 MILES AVENUE,
LOS GATOS, CA 95030

REVISIONS

NO.	ITEM	DATE

PERMIT #: B19-1152 & B19-1161
SUBMITTAL: CITY SUBMITTAL SET
DRAWN BY: NS
CHECKED BY: SR
JOB NO: 1826
DATE: 12/04/19

SHEET NO. M6.1

6/15/2020 10:14 AM

6	NOT USED	NTS

7	NOT USED	NTS

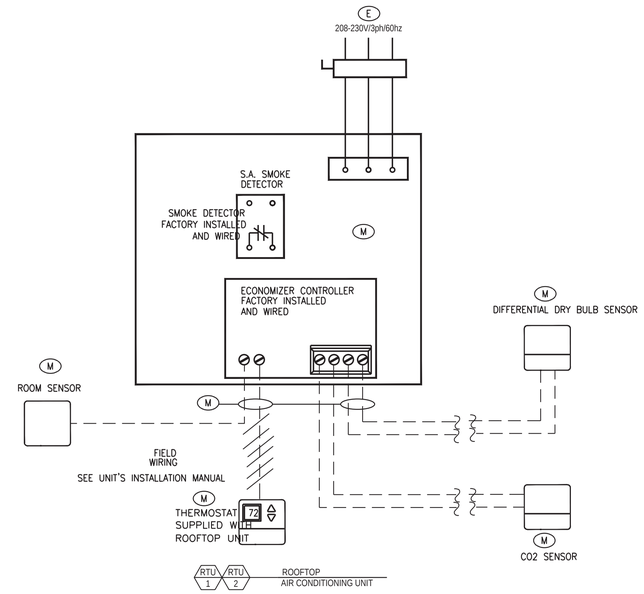

1	RTU CONTROL	NTS

8	NOT USED	NTS

5	NOT USED	NTS

3	NOT USED	NTS

Cuschieri Horton Architects
1475 S. Bascom Ave, Suite 204
Campbell, California 95008
408.371.8200 Fx 408.371.8201

ACIES ENGINEERING
3371 Olcott Street
Santa Clara, CA 95054
ph: (408) 522-5255
fx: (408) 522-5260
info@acies.net

Copyright © 2019

REGISTERED PROFESSIONAL ENGINEER
Sai Velkur
No.M28498
Exp. 06/30/21
MECHANICAL
STATE OF CALIFORNIA

CONTROLS

TOWN OF LOS GATOS
ENGINEERING BUILDING TI ~~AND STORAGE BUILDING~~
41 MILES AVENUE,
LOS GATOS, CA 95030

REVISIONS

NO.	ITEM	DATE
1	RESPONSE TO FIRST REVIEW COMMENTS	07/17/20

PERMIT #:
B19-1152 & B19-1161
SUBMITTAL:
CITY SUBMITTAL SET
DRAWN BY: NS
CHECKED BY: SR
JOB NO: 1826
DATE: 12/04/19
SHEET NO.
M9.1

6/15/2020 10:14 AM

PLUMBING FIXTURE SCHEDULE

FIXT. ID	DESCRIPTION	MANUFACTURER	ROUGH IN W	ROUGH IN V	ROUGH IN CW	ROUGH IN HW	GAS	REMARKS
LV-1	LAVATORY	SLOAN	2"	1-1/2"	1/2"	1/2"	-	SLOAN SS-3000 SERIES #SS-3002 BASIN. AMERICAN STANDARD COLONY PRO #7075.054.002 SINGLE HANDLE FAUCET, POLISHED CHROME FINISH, WASHERLESS 35 MM CERAMIC DISC VALVE CARTRIDGE, VANDAL RESISTANT 0.5 GPM (1.9 LPM) PRESSURE COMPENSATING AERATOR OUTLET. POWERS #LFLM495, POINT OF USE THERMOSTATIC MIXING VALVE, LEAD-FREE BRASS BODY, ADJUSTABLE TEMPERATURE SELECTION WITH LOCK DOWN, TEMPERATURE ADJUSTMENT RANGE 80.6 °F (27 °C) TO 120.2 °F (49 °C), TEMPERATURE CONTROLS TO ASSE 1069 1070 DOWN TO 0.5 US GAL (1.9 L). PROVIDE TEE, ADAPTORS AND FLEX. COPPER TUBING TO SUIT INSTALLATION. PROVIDE TEMPERED WATER TO HOT SIDE OF FAUCET. MCGUIRE #155A OPEN GRID DRAIN. MCGUIRE #LFH2165LKN3, FAUCET SUPPLIES. LOW LEAD. MCGUIRE #8902CB P-TRAP. LOW LEAD.
KS-1	KITCHEN SINK	FRANKE	2"	2"	1/2"	1/2"	-	FRANKE COMMERCIAL #ALBS6805P-1/1 SINGLE BOWL COUNTERTOP MOUNT SINK. AMERICAN STANDARD COLONY PRO #7074010.002 SINGLE HANDLE FAUCET. POWERS #LFLM495-1, POINT OF USE THERMOSTATIC MIXING VALVE. PROVIDE TEE, ADAPTORS AND FLEX. COPPER TUBING TO SUIT INSTALLATION. PROVIDE TEMPERED WATER TO HOT SIDE OF FAUCET. MCGUIRE #LFH2165LKN3, FAUCET SUPPLIES. LOW LEAD. MCGUIRE #8912CB P-TRAP. MCGUIRE PROWRAP #PW2000 SANITARY COVERING VANDAL-RESISTANT.
WC-1	WATER CLOSET	SLOAN	4"	2"	3/4"	-	-	SLOAN WETS #WETS-8009.8016 HET TOILET, FLOOR MOUNTED, FLUSHMATE, 1.0 US GAL (3.8 L) PER FLUSH, 11-1/4" X 9-3/4" (286 MM X 248 MM) WATER SURFACE, CENTOCO #500STSCC.001 TOILET SEAT MCGUIRE #LFH166LKN3, TOILET SUPPLY, CHROME PLATED FINISH POLISHED BRASS, HEAVY DUTY ANGLE STOPS. PROVIDE FLOOR FLANGE, (SAME MATERIAL AS THE CONNECTING PIPE DRAIN), WITH ALL BRASS BOLTS AND WITH RUBBER GASKET.
RF-1	REFRIGERATOR	T.B.D.	-	-	1/2"	-	-	SELECTED BY OTHERS.
WF-1	WATER FILTER STATION	T.B.D.	-	-	1/2"	-	-	SELECTED BY OTHERS.
MX-1	THERMOSTATIC MIXING VALVE	WATTS	-	-	1/2"	1/2"	-	LFLM495-1 POINT OF USE THERMOSTATIC MIXING VALVE, LEAD-FREE BRASS BODY, ADJUSTABLE TEMPERATURE SELECTION WITH LOCK DOWN, INTEGRAL CHECK ANDSCREEN PREVENTS CROSS-FLOW AND CONTAMINATION, TEMPERATURE ADJUSTMENT RANGE 80.6 °F (27 °C) TO 120.2 °F (49 °C), TEMPERATURE CONTROLS TO ASSE 1069 \1070 DOWN TO 0.5 US GAL (1.9 L).
IWH-1	INSTANTANEOUS WATER HEATER	CHRONOMITE	-	-	1/2"	1/2"	-	MODEL #SR30L/120, MIN. ACTIVATION FLOW 0.5 GPM, RECOVERY RATE 0.5 GPM@49°F, ELECTRICAL INPUT 3.6 kW, 120V, 1 PH, 30 A.
FD-1	FLOOR DRAIN	WATTS	2"	2"	-	-	-	WATTS FLOOR DRAIN MODEL #FD-100-A5-6-7. EPOXY COATED CAST IRON BODY, REVERSIBLE FLASHING CLAMP WITH PRIMARY AND SECONDARY WEEPHOLES, VANDAL PROOF, NO HUB OUTLET.
WCO	WALL CLEANOUT	WATTS	SAME AS PIPE SIZE	-	-	-	-	WATTS WALL CLEANOUT MODEL #CO-460-RD. CAST IRON BODY, REMOVABLE, GASKETED, BRASS PLUG, ROUND COVER, ACCESS COVER, STAINLESS STEEL COVER, NO HUB OUTLET.
TP-1	TRAP PRIMER	WATTS	-	-	1/2"	-	-	WATTS TRAP SEAL PRIMER MODEL # LFTP300T. BRONZE BODY, ACTIVATES WITH 10PSIG PRESSURE DROP BETWEEN 25-125 PSI, 1/2" DIAMETER THREADED INLET/OUTLER CONNECTION BUILT-IN VACUUM BREAKER PORTS.
FWD-1	FOOD WASTE DISPOSER	INSINK	2"	-	-	-	-	INSINK ERATOR FOOD WASTE DISPOSER, MODEL BADDGER 5 OR APPROVED EQUAL, 120V, 1/2 HP, WITH POWER CORD, ON/OF WALL SWITCH BY THE ELECTRICAL CONTRACTOR.
CP-1	CONDENSATE PUMP	LITTLE GIANT	3/4"	-	-	-	-	LITTLE GIANT 1/30 HP CONDENSATE REMOVAL PUMP, SMALL RESERVOIR, 115VAC, 3/8" BARB DISCHARGE SIZE.
HB-1	HOSE BIBB	LITTLE GIANT			3/4"			WATTS HOSE BIBB MODEL #SC8-1 .CAST BRASS, WALL MOUNT, WATTS MODEL 8B TAMPER-PROOF VACUUM BREAKER WITH BREAK-AWAY SCREW, ADJUSTABLE PACKING NUT CARTRIDGE, NO KINK FAUCET, 1/2" (13 MM) MALE NPT OF COPPER SWEAT CONNECTION WITH TEE HANDLE.
BFP-1	BACKFLOW PREVENTER	WATTS	-	-	3/8"	-	-	MODEL SD-3, DUAL CHECK VALVE ASSEMBLY, WITH ATMOSPGERIC PORT. ASSE 1022 LISTED.

TABLE 5.303.2.3 FIXTURE FLOW RATES
NONRESIDENTIAL MANDATORY MEASURES

FIXTURE TYPE	MAXIMUM FLOW RATE
SHOWERHEADS	2 GPM @ 80 PSI
MULTIPLE SHOWERHEADS	2 GPM @ 80 PSI
LAVATORY FAUCETS - NONRESIDENTIAL	0.4 GPM @ 60 PSI
KITCHEN FAUCETS [2]	1.8 GPM @ 60 PSI
WASH FOUNTAINS	1.8 (RIM SPACE (IN)/20 GPM @ 60 PSI)
METERING FAUCETS	0.20 GALLONS PER CYCLE
METERING FAUCETS FOR WASH FOUNTAINS	.20 (RIM SPACE (IN)/20 GPM @ 60 PSI)
FOOD WASTE DISPOSERS	1 GPM WHEN DISPOSER IS NOT IN USE [3]
GRAVITY TANK TYPE WATER CLOSETS	1.28 GALLONS/FLUSH [1]
FLUSHOMETER TANK WATER CLOSETS	1.28 GALLONS/FLUSH [1]
FLUSHOMETER VALVE WATER CLOSETS	1.28 GALLONS/FLUSH [1]
ELECTROMECHANICAL HYDRAULIC WATER CLOSETS	1.28 GALLONS/FLUSH [1]
URINALS	0.125 GALLONS/FLUSH

1. INCLUDES SINGLE AND DUAL FLUSH WATER CLOSETS WITH AN EFFECTIVE FLUSH OF 1.28 GALLONS OR LESS:
SINGLE FLUSH TOILETS-THE EFFECTIVE FLUSH VOLUME SHALL NOT EXCEED 1.28 GALLONS (4.8 LITERS). THE EFFECTIVE FLUSH VOLUME IS THE AVERAGE FLUSH FLUSH VOLUME WHEN TESTED IN ACCORDANCE WITH ASME A119.19.233.2.
DUAL FLUSH TOILETS-THE EFFECTIVE FLUSH VOLUME SHALL NOT EXCEED 1.28 GALLONS (4.8 LITERS). THE EFFECTIVE FLUSH VOLUME IS DEFINED AS THE COMPOSITE, AVERAGE FLUSH VOLUME OF TWO REDUCED FLUSHES AND ONE FULL FLUSH. FLUSH VOLUMES WILL BE TESTED IN ACCORDANCE WITH ASME A 112.19.14.
2. KITCHEN FAUCETS MAY TEMPORARILY INCREASE A FLOW ABOVE THE MAXIMUM RATE, BUT NOT TO EXCEED 2.2 GPM AT 60PSI, AND MUST DEFAULT TO A A MAXIMUM FLOW RATE OF 1.8 GPM @ 60 PSI
3. 1 GPM MAX WHEN THE DISPOSER IS NOT IN USE (NOT ACTIVELY GRINDING GOOD WASTE / NO-LOAD) OR SHALL AUTOMATICALLY SHUT OFF AFTER NO MORE THAN 10 MINUTES OF INACTIVITY. DISPOSER SHALL USE NO MORE THAN 8 GPM OF WATER.
NOTE: THIS CODE SECTION DOES NOT AFFECT LOCAL JURISDICTION AUTHORITY TO PROHIBIT OR REQUIRE DISPOSER INSTALLATION.

GENERAL PLUMBING NOTES

#	DESCRIPTION
1	CONSTRUCTION TO CONFORM WITH: - 2016 CALIFORNIA BUILDING CODE, WITH LOCAL AMENDMENTS - 2016 CALIFORNIA MECHANICAL CODE, WITH LOCAL AMENDMENTS - 2016 CALIFORNIA PLUMBING CODE. WITH LOCAL AMENDMENTS - 2016 CALIFORNIA ELECTRICAL CODE, WITH LOCAL AMENDMENTS - 2016 CALIFORNIA FIRE CODE, WITH LOCAL AMENDMENTS - 2016 CALIFORNIA ENERGY CODE, WITH LOCAL AMENDMENTS - 2016 CALIFORNIA GREEN BUILDING STANDARDS CODE. - TITLE 24 ENERGY EFFICIENCY STANDARDS, 2016 EDITION. - ALONG WITH ANY OTHER APPLICABLE LOCAL CODE AND STATE LAWS AND REGULATIONS
2	SOIL OR WASTE PIPE SHALL SLOPE 2% MINIMUM, UNLESS OTHERWISE NOTED OR REQUIRED BY CODE
3	ALL DRAIN, WATER & GAS LINES SHALL BE KEPT TIGHT TO THE UNDERSIDE OF EQUIPMENT & SECURED IN PLACE
4	PROVIDE TRAP PRIMERS FOR FLOOR DRAINS.
5	CONTRACTOR SHALL VERIFY THE LOCATION OF THE SANITARY SEWER AT SITE AND SHALL REVISE THE SEWER SYSTEM AS REQUIRED
6	ALL CLEANOUTS SHALL BE INSTALLED WHERE READILY ACCESSIBLE. THE CONTRACTOR SHALL COORDINATE ALL CLEANOUT LOCATIONS WITH EQUIPMENT, CABINETS, ETC. AND THE ARCHITECT PRIOR TO ANY INSTALLATION
7	ALL VALVES, TRAP PRIMERS, WATER HAMMERS ARRESTORS OR OTHER EQUIPMENT SHOWN IN WALLS OR ABOVE NON-ACCESSIBLE CEILING SHALL BE INSTALLED BEHIND AN ACCESS PANEL
8	ALL PLUMBING FIXTURE VENTS TO TERMINATE A MINIMUM OF 12 INCHES FROM ANY VERTICAL SURFACE AND 10 FEET FROM ANY OUTSIDE AIR INTAKE
9	CONTRACTOR SHALL PROVIDE CONDENSATE DRAINS FROM A/C UNITS TO APPROVED DRAIN POINT
10	INSTALLATION SHALL CONFORM TO THE ENERGY CODE FOR NEW NON-RESIDENTIAL BUILDINGS
11	PRIOR TO COMMENCING WORK ON THIS PROJECT, CONTRACTOR SHALL VERIFY DEPTH, SIZE, LOCATION AND CONDITION OF ALL EXISTING UTILITIES IN FIELD BEFORE STARTING WORK. SHOULD CONDITIONS EXIST OTHER THAN THOSE INDICATED WHICH WOULD CAUSE THE DESIGN TO BE ALTERED, CONTRACTOR SHALL NOTIFY OWNER AND GENERAL CONTRACTOR IMMEDIATELY
12	CONTRACTOR SHALL COORDINATE INSTALLATION OF PLUMBING WORK WITH ALL OTHER TRADES SO AS TO AVOID UNNECESSARY DELAY OR INTERFERENCES. CONTRACTOR TO REVIEW ARCHITECTURAL AND EQUIPMENT SHEETS
13	ALL PLUMBING WORK AND MATERIALS SHALL BE INSTALLED IN ACCORDANCE WITH ALL APPLICABLE STATE & LOCAL ORDINANCES & REGULATIONS HAVING JURISDICTION. CONTRACTOR SHALL OBTAIN ALL APPROVALS REQUIRED FROM REGULATING AGENCIES BEFORE STARTING WORK. ALL PLUMBING WORK & MATERIALS SHALL MEET THE REQUIREMENTS OF THE LATEST EDITIONS OF THE LOCAL PLUMBING CODE, UNLESS OTHERWISE REQUIRED BY THE DEPARTMENT OF BUILDING & SAFETY. OBTAIN & PAY FOR ALL PERMITS, FEES & INSPECTIONS REQUIRED BY GOVERNING AUTHORITIES. ALL PIPING TO BE CONCEALED UNLESS NOTED OTHERWISE
14	THE EQUIPMENT ROUGH-INS AS SHOWN ARE BASED UPON AVAILABLE INFORMATION HOWEVER, IN SOME INSTANCES, THE OWNER OR SUPPLIER MAY SUBSTITUTE OR THE EQUIPMENT ITEM MAY VARY FROM WHAT IS SHOWN, THEREFORE, THE CONTRACTOR SHALL VERIFY ALL CRITICAL DIMENSIONS WITH THE OWNER PRIOR TO CONSTRUCTION. FAILURE OF THE CONTRACTOR TO VERIFY THESE DIMENSIONS SHALL PLACE THE RESPONSIBILITY FOR ANY SUBSEQUENT RELOCATION DIRECTLY ON THE CONTRACTOR
15	CONTRACTOR SHALL PROVIDE GAS PIPING TO UNITS AND ALL FINAL CONNECTIONS REQUIRED FOR OPERATION
16	INSTALL SHUT-OFF VALVES ON ALL HOT & COLD WATER LINES TO FIXTURE OR APPLIANCE
17	PROVIDE A LEVER HANDLE GAS SHUTOFF VALVE IN THE BRANCH PIPING OF EACH APPLIANCE OR PIECE OF EQUIPMENT. FOR EACH APPLIANCE INSTALL QUICK DISCONNECT, FLEXIBLE PIPE AND RESTRAINING DEVICE FURNISHED BY OWNER. PROVIDE PRESSURE REDUCING VALVES AT EACH PIECE OF EQUIPMENT OR APPLIANCE IF GAS PRESSURE GREATER THAN 8" IS USED DOWNSTREAM FROM THE METER
18	ALL VALVES, UNIONS, ETC. TO BE SAME SIZE AS PIPE UNLESS OTHERWISE INDICATED ON DRAWINGS
19	ENSURE THAT ANY PENETRATIONS MADE THROUGH THE COOLER/FREEZER UNIT ARE TO BE SEALED PROPERLY TO PREVENT WATER INFLATION
20	ENSURE THAT ALL JOINTS, GAPS AND SPACES ALONG THE PERIMETER OF PLUMBING FIXTURES ARE TO BE SEALED WITH NSF APPROVED SEALANT TO WITHIN 1/32"
21	PRIOR TO BEING CONCEALED, PIPING PENETRATIONS AT FIRE RESISTIVE ASSEMBLIES SHALL BE INSPECTED TO VERIFY COMPLIANCE WITH THE FIRE RESISTANCE RATING
22	SURFACE MOUNTED PIPING IS NOT ACCEPTABLE. PIPING AND CONDUITS OF ALL TYPES MUST BE CONCEALED WITHIN WALLS, FLOORS AND CEILING, INCLUDING CONDENSATE DRAIN LINES, WATER HEATER PRESSURE RELIED LINES AND SODA LINES
23	REFER TO STRUCTURAL DRAWINGS FOR PIPING AND EQUIPMENT SUPPORT DETAILS
24	ALL FITTINGS AND FIXTURES IN CONTACT WITH POTABLE WATER SHALL BE LOW LEAD
25	FLOOR SINKS, TRAPS, AND SANITARY DRAIN PIPING WITHIN 10 FEET OF DRAIN RECEIVING CONDENSATE AND EQUIPMENT DRAIN WATER BELOW 60 DEGREE F SHALL BE INSULATED WITH 1" THICK DENSITY GLASS FIBER INSULATION

MATERIAL SPECIFICATIONS

SERVICES		CAST IRON NO-HUB	GALV. STEEL SCH 40	BLACK STEEL SCH 40	TYPE M COPPER	TYPE L COPPER	TYPE K COPPER	REMARKS
COLD WATER	ABOVE GROUND					●		
	BELOW GROUND						●	
HOT/TEMP WATER	ABOVE GROUND					●		
	BELOW GROUND						●	
WASTE	ABOVE GROUND	●						
	BELOW GROUND	●						
VENT	ABOVE GROUND	●						
	BELOW GROUND	●						
INDIRECT WASTE	ABOVE GROUND				●			
	BELOW GROUND				●			
NATURAL GAS	ABOVE GROUND			●				
	BELOW GROUND		●					
CONDENSATE DRAIN	ABOVE GROUND				●			
	BELOW GROUND				●			

PIPING INSULATION SCHEDULE

PIPE SIZE:	< 1"	1" - 1-1/2"	1-1/2" - 4"	4" TO < 8"	8" & LARGER
INSULATION THICKNESS	1"	1-1/2"	1-1/2"	1-1/2"	1-1/2"

ALL INSULATION SHALL BE W/R VALUES OF 4.0 TO 4.6.
BASED ON TABLE 120.3-A 2016 BUILDING ENERGY EFFICIENCY STANDARDS

PLUMBING LEGEND

SYMBOL	ABBREVIATION	DESCRIPTION
	CW	COLD WATER PIPING
	HW	HOT WATER PIPING (140° F)
	HWR	HOT WATER RECIRCULATION PIPING (140° F)
TW	TW	TEMPERED WATER PIPING (110° F)
TWR	TWR	TEMPERED WATER RECIRCULATION PIPING (110° F)
FP	F	FIRE PROTECTION WATER PIPING
	S OR W	SOIL OR WASTE PIPING BELOW GRADE
	S OR W	SOIL OR WASTE PIPING ABOVE GRADE
CWV	CWV	COMBINATION WASTE & VENT PIPING
	V	VENT PIPING
CD	CD	CONDENSATE DRAIN PIPING
D	ID	INDIRECT DRAIN PIPING
G	G	NATURAL GAS PIPING
	WHA	WATER HAMMER ARRESTOR
	P.O.C.	POINT-OF-CONNECTION
		POINT-OF-DISCONNECTION
		CAPPED
		GAS COCK WITH UNION
		UNION
	UP	PIPE UP
	DN	PIPE DOWN
	DN	PIPE TEE DOWN
	BV	BALL VALVE
	CV	CHECK VALVE
	RED	REDUCER
		BALANCING VALVE
	PUMP	PUMP
	FCO	FLOOR CLEANOUT OR GRADE CLEANOUT
	WCO	WALL CLEANOUT
	AFF	ABOVE FINISHED FLOOR
	BFF	BELOW FINISHED FLOOR
	BG	BELOW GROUND
	(E)	EXISTING
	(N)	NEW
	NTS	NOT TO SCALE
	IE	INVERT ELEVATION
	QTY.	QUANTITY
	V.T.R.	VENT THROUGH ROOF
	CWF	COLD FILTRATED WATER
	V.I.F.	VERIFY IN FIELD
	FU	FIXTURE UNIT
W 1 V 1	W OR V 1	WASTE AND VENT STACK WASTE AND VENT STACK NUMBER
CW 1 HW 1	R 1	WATER RISER WATER RISER NUMBER
G 1	G 1	GAS RISER GAS RISER NUMBER

NOTE:
NOT ALL SYMBOLS AND ABBREVIATIONS ARE NECESSARILY USED IN THIS PROJECT.

CONDENSATE DRAIN PIPING SIZING CHART

CONDENSATE DRAIN SIZE (IN INCHES)	MAXIMUM EQUIPMENT CAPACITY IN TONS OF REFRIGERATION (SLOPE : 1/8" PER FOOT)	REMARK
3/4"	20	WITH PIPE RUNNING AT 3/4 FULL AND OUTSIDE AIR AT 90°F DB AND 73°F WB, ROOM AIR AT 75°F DB & 62.5°F WB
1"	21-40	
1-1/4"	41-90	
1-1/2"	91-125	
2"	126-250	

AS PER 2016 CALIFORNIA PLUMBING CODE, TABLE 814.1.

PLUMBING DRAWING SCHEDULE

#	TITLE
P0.1	PLUMBING LEGEND,GENERAL NOTES AND SCHEDULES
P0.2	PLUMBING CALCULATIONS AND SPECIFICATIONS
P1.0	PLUMBING SITE PLAN
P1.1	PLUMBING DEMOLITION ENGINEERING BUILDING REMODELING PLAN
P2.1	SANITARY SEWER AND VENT PLUMBING ENGINEERING BUILDING REMODELING PLAN
P3.1	DOMESTIC WATER AND GAS PLUMBING ENGINEERING BUILDING REMODELING PLAN
P3.2	DOMESTIC WATER NEW STEEL BUILDING PLUMBING PLAN
P4.1	PLUMBING ROOF ENGINEERING BUILDING REMODELING PLAN
P4.2	PLUMBING ROOF NEW STEEL BUILDING PLAN
P6.1	PLUMBING DETAILS - I
P6.2	PLUMBING DETAILS - II

Cuschieri Horton Architects
1475 S. Bascom Ave, Suite 204
Campbell, California 95008
408.371.8200 Fx 408.371.8201

ACIES ENGINEERING
3371 Olcott Street
Santa Clara, CA 95054
ph: (408) 522-5255
fx: (408) 522-5260
info@acies.net

Copyright © 2019

REGISTERED PROFESSIONAL ENGINEER
No.M28498
Exp. 06/30/21
MECHANICAL
STATE OF CALIFORNIA

PLUMBING LEGEND, GENERAL NOTES AND SCHEDULES

TOWN OF LOS GATOS
ENGINEERING BUILDING TI AND STORAGE BUILDING
41 MILES AVENUE,
LOS GATOS, CA 95030

REVISIONS

NO.	ITEM	DATE
1	RESPONSE TO FIRST REVIEW COMMENTS	07/17/20

PERMIT #:

SUBMITTAL:
CITY SUBMITTAL SET
DRAWN BY:
CHECKED BY:
JOB NO: 1826
DATE: 12/04/19

SHEET NO.
P0.1

6/16/2020 1:17 PM

DOMESTIC WATER FIXTURE UNITS CALUCULATION

ITEM	QTU.	DESCRIPTION	WATER PIPING						WASTE PIPING	
			WATER SERVICE		CW		HW			
			F.U. WATER SERVICE	TOTAL WATER SERVICE F.U.	F.U. PER FIXTURE (75%CW)	TOTAL CW F.U.	F.U. PER FIXTURE (75%HW)	TOTAL H.W. F.U.	F.U. PER FIXTURE	TOTAL SS F.U.
LV-1	2	LAVATORY	0.5	1.0	0.375	0.750	0.375	0.750	1.0	2.000
WC-1	2	WATER CLOSET	2.5	5.0	-	5.000	-	-	4.0	8.000
UR-1	1	URINAL	2.0	2.0	-	2.000	-	-	2.0	2.000
KS-1	1	KITCHEN SINK	1.0	1.0	0.750	0.750	0.750	0.750	1.5	1.500
WF-1	1	WATER FILTER STATION	0.5	0.5	-	0.500	-	-	-	-
RF-1	1	REFRIGERATOR	0.3	0.3	-	0.300	-	-	-	-
TP-1	1	TRAP PRIMER	0.3	0.3	-	0.300	-	-	-	-
FD-1	1	FLOOR DRAIN	-	-	-	-	-	-	2.0	2.000
		TOTAL	-	10.10	-	9.60	-	1.50	-	15.50

NOTES:
1.WATER SUPPLY FIXTURE UNITS ARE BASED ON 2016 CPC, APPENDIX A, TABLE 103.1

MINIMUM PIPE SIZES

	COLD WATER	SANITARY SEWER
TOTAL	10.1 F.U.= 9 GPM = 1"	15.5 F.U.= 4"SS
	VELOCITY <= 8 F.P.S. PRESSURE = MAXIMUM POSSIBLE FOR VELOCITY <= 8 F.P.S AND GIVEN PIPE SIZE.	

GAS CALCULATIONS

FIXT. ID	QTY.	DESCRIPTION	PIPE SIZE	BTU/HR. INPUT	TOTAL BTU/HR
RTU-1	1	EXISTING ROOFTOP UNIT - 1	1"	70,000	70,000
RTU-2	1	NEW ROOFTOP UNIT - 2	1"	115,000	115,000
RH-1	1	EXISTING RADIANT SPACE HEATER	1-1/4"	150,000	150,000
			1-1/2"	TOTAL	335,000

LOW PRESSURE GAS PIPE SIZING - SEE LOW PRESSURE GAS PIPING SIZING CHART
DISTANCE FROM GAS REGULATOR TO MOST REMOTE FIXTURE IS 235'.
NOTE:
VERIFY IN FIELD EXACT GAS REGULATOR LOCATION

LOW PRESSURE GAS PIPING SIZING CHART

PIPE SIZE (IN.)	1/2	3/4	1	1-1/4	1-1/2	2	2-1/2	3	4
LENGTH (FT.)	CAPACITY IN CUBIC FEET OF GAS PER HOUR								
100	50	104	195	400	600	1160	1840	3260	6640
125	44	92	173	355	532	1020	1630	2890	5890
150	40	83	157	322	482	928	1480	2610	5330
175	37	77	144	296	443	854	1360	2410	4910
200	34	71	134	275	412	794	1270	2240	4560
250	30	63	119	244	366	704	1120	1980	4050
300	27	57	108	221	331	638	1020	1800	3670
350	25	53	99	203	305	587	935	1650	3370
400	23	49	92	189	283	546	870	1540	3140
450	22	46	86	177	266	512	816	1440	2940
500	21	43	82	168	251	484	771	1360	2780

2016 CPC, TABLE 1216.2(1) SCHEDULE 40 METALIC PIPE
GAS: NATURAL
INLET PRESSURE: LESS THAN 2 PSI
PRESSURE DROP: 0.5 IN W.C.
SPECIFIC GRAVITY: 0.60

PLUMBING SPECIFICATIONS

PART 1 GENERAL

1.01

SCOPE OF WORK:
FURNISH ALL LABOR, MATERIALS, EQUIPMENT AND SERVICES REQUIRED FOR AND/OR REASONABLY INCIDENTAL TO THE COMPLETION OF THE FOLLOWING WORK.
A. SANITARY WASTE AND VENT PIPING SYSTEM INCLUDING CONNECTIONS TO BUILDING SEWER AS SHOWN.
B. DOMESTIC HOT AND COLD WATER SYSTEMS INCLUDING WATER HEATER, AND RELATED ACCESSORIES AND CONTROLS. CONNECTION TO BUILDING WATER AS SHOWN.
C. PLUMBING FIXTURES, TRIM AND ACCESSORIES INCLUDING INSTALLATION AND SUPPORT.
D. FLASHING AND SEALING OF ROOF AND EXTERIOR WALL PENETRATIONS FOR WATER TIGHTNESS.
E. CAULKING AND SEALING OF FLOOR AND WALL PENETRATIONS AND FORMED SHAFT PENETRATIONS.
F. BACKING FOR SECURING FIXTURES, TRIM AND PIPING.
G. ACCESS DOORS WHERE SHOWN OR REQUIRED BY CODE.
H. HANGERS, SUPPORTS, AND GUIDES.
I. CLEANUP OF DEBRIS AND FINAL CLEANUP OF DRAINS, FIXTURES AND EQUIPMENT.
J. RECORD DRAWINGS AND OPERATING MANUALS.
K. LICENSE, PERMITS AND ASSOCIATED FEES. M. CONDENSATE DRAINS FROM HVAC EQUIPMENT.
L. CUTTING, DRILLING AND PATCHING FOR ALL SURFACES IN RELATION TO PLUMBING WORK.

1.02

RELATED WORK INCLUDED UNDER OTHER SECTIONS:
A. DIVISION 21 00 00 - WET PIPE SPRINKLER SYSTEMS
B. DIVISION 23 00 00 - HEATING, VENTILATING AND AIR CONDITIONING
C. DIVISION 26 00 00 - ELECTRICAL

1.03

EXAMINATION OF SITE:
A. VISIT SITE BEFORE SUBMITTING BID AND CHECK LOCATION OF ALL EXISTING CONDITIONS WHICH WILL AFFECT THIS WORK, VERIFY DIMENSIONS AND LOCATIONS SHOWN ON DRAWINGS AND COVER ALL COSTS. CONTRACTOR SHALL ASSUME REASONABLE VARIATIONS OR MINOR OMISSIONS AND SHALL COMPLETE PROPOSED WORK WITHOUT ADDITIONAL COST. FAILURE TO VISIT SITE WILL NOT LESSEN RESPONSIBILITY OR ENTITLE ADDITIONAL COMPENSATION FOR WORK NOT INCLUDED IN PROPOSAL.

1.04

DRAWINGS:
THE ACCOMPANYING DRAWINGS SHALL BE CONSIDERED PART OF THESE SPECIFICATIONS. WORK AND MATERIALS SHOWN ON THE DRAWINGS AND NOT MENTIONED IN THE SPECIFICATIONS AND VICE VERSA SHALL BE EXECUTED AS IF SPECIFICALLY MENTIONED OR SHOWN IN BOTH. THE DRAWINGS SHALL BE CONSIDERED AS SCHEMATIC IN NATURE AND MINOR MODIFICATIONS OF THE WORK TO COMPLY WITH THE STRUCTURE AS FOUND SHALL BE MADE.

1.05

RULES AND REGULATIONS:
A. ALL WORK AND MATERIAL SHALL BE IN FULL ACCORDANCE WITH THE LATEST RULES AND REGULATIONS OF THE STATE FIRE MARSHAL AND OTHER APPLICABLE STATE AND LOCAL RULES AND REGULATIONS. NOTHING IN THESE DRAWINGS OR SPECIFICATIONS SHALL BE CONSTRUED TO PERMIT WORK NOT CONFORMING TO THESE CODES.
B. FURNISH WITHOUT ANY EXTRA CHARGE ANY ADDITIONAL MATERIAL AND LABOR WHEN REQUIRED TO COMPLY WITH THESE LAWS, ORDINANCES AND CODES REGARDLESS OF WHETHER SHOWN OR MENTIONED IN THESE SPECIFICATIONS OF DRAWINGS.

1.06

SUBMITTALS:
A. SUBMIT FOR REVIEW TO THE OWNER A COMPLETE AND ALL-INCLUSIVE LIST OF EQUIPMENT AND MATERIALS PROPOSED FOR USE (6 COPIES), ACCOMPANIED BY MANUFACTURER'S DATA SHEETS. DATA SHALL BE FORWARDED IN A SINGLE PACKAGE WRITTEN 15 DAYS AFTER AWARD OF CONTRACT. SUBMIT SIX BLUELINE PRINTS AND ONE REPRODUCIBLE SHOP DRAWING SHOWING PROPOSED PLUMBING INSTALLATION. INCLUDE SIZES, LOCATIONS AND OTHER REQUIRED INFORMATION TO COORDINATE INSTALLATION WITH OTHER TRADES.
B. WITHIN 5 DAYS AFTER AWARD OF CONTRACT, SUBMIT 6 COPIES OF A LETTER STATING ANY MATERIALS THAT CONTRACTOR WISHES TO SUBSTITUTE, TO THE OWNER FOR APPROVAL. INCLUDE SUCH INFORMATION AS MANUFACTURER'S NAME, TYPE OF MATERIAL, CERTIFIED RATINGS, OVERALL APPEARANCE, AND NECESSARY INFORMATION TO EXPLAIN FUNCTION AND OPERATION OF MATERIAL. ALL PROPOSED SUBSTITUTIONS SHALL BE EQUAL IN QUALITY, DESIGN, UTILITY AND APPEARANCE TO MATERIAL, EQUIPMENT OR METHOD SPECIFIED.

1.07

AS-BUILT DRAWINGS:
A SET OF PLUMBING PLANS WILL BE FURNISHED TO THE CONTRACTOR ON WHICH HE SHALL INDICATE THE INSTALLATION "AS-BUILT" AS THE WORK PROGRESSES. UPON COMPLETION OF THE WORK, A SET OR REPRODUCIBLE DRAWINGS SHALL BE OBTAINED FROM THE OWNER AT COST, AND ALL CHANGES AS NOTED ON THE RECORD SET OF PRINTS SHALL BE INCORPORATED THEREON. THIS SET OF REPRODUCIBLES, ALONG WITH ONE SET OF BLUEPRINTS, SHALL BE DELIVERED TO THE OWNER UPON COMPLETION AND BEFORE FINAL ACCEPTANCE OF THE PROJECT.

1.08

GUARANTEE:
THE CONTRACTOR SHALL LEAVE THE ENTIRE INSTALLATION IN COMPLETE WORKING ORDER FREE FROM ANY DEFECTIVE MATERIAL, WORKMANSHIP OR FINISH. HE SHALL GUARANTEE TO REPAIR OR REPLACE, WITHOUT CHARGE, DEFECTS DUE TO FAULTY WORKMANSHIP OR MATERIAL FOR A PERIOD OF ONE YEAR FROM THE DATE OF FILING OF THE NOTICE OF COMPLETION.

1.09

OPERATION MANUALS AND OWNER INSTRUCTIONS:
A. PROVIDE COMPLETE OPERATION AND MAINTENANCE MANUALS COVERING ALL PLUMBING SYSTEMS AND EQUIPMENT THAT HAVE BEEN INSTALLED. THREE (3) COPIES OF THE MANUAL SHALL BE BOUND IN HARDBACK BINDERS.
B. PROVIDE INSTRUCTIONS TO OWNER AS TO OPERATION OF ALL EQUIPMENT. INSTRUCTION PERIOD TO COMMENCE FOR MINIMUM OF (2) HOURS AND SHALL BE SCHEDULED AT OWNER'S CONVENIENCE.

1.10

CUTTING AND PATCHING:
A. THE CONTRACTOR SHALL DO ALL CUTTING, DRILLING AND PATCHING WHICH MAY BE REQUIRED FOR THE INSTALLATION OF THE WORK UNDER THIS SECTION OF THE SPECIFICATIONS.
B. PATCHING SHALL BE OF THE SAME WORKMANSHIP, MATERIAL, AND FINISH AND SHALL MATCH ACCURATELY ALL SURROUNDING CONSTRUCTION IN A MANNER SATISFACTORY TO THE OWNER. NO CUTTING OF THE STRUCTURE SHALL BE PERMITTED WITHOUT WRITTEN APPROVAL OF THE OWNER.

PART 2 MATERIALS

2.01

PIPING:
A. HUBLESS CAST IRON SOIL PIPE AND FITTINGS:
1. PIPE AND FITTINGS FOR BOTH UNDERGROUND AND ABOVEGROUND INSTALLATION SHALL BE NO-HUB CAST IRON PIPE AND FITTINGS MANUFACTURED FROM GRAY CAST IRON AND SHALL CONFORM TO ASTM A 888, AND CISPI 301 (CURRENT VERSION). ALL PIPE AND FITTINGS ARE TO BE INSTALLED IN ACCORDANCE WITH MANUFACTURER'S RECOMMENDATIONS AND LOCAL CODE REQUIREMENTS. PRODUCTS MUST BE MARKED WITH THE NAME OF THE USPTO REGISTERED TRADEMARK OF THE MANUFACTURER. ACCEPTABLE MANUFACTURERS ARE CHARLOTTE PIPE, STAR PIPE PRODUCTS, TYLER/AB&I OR APPROVED EQUAL.
2. STANDARD COUPLINGS SHALL BE USED FOR BRANCH PIPING AND SHALL CONFORM TO CISPI STANDARD 310, ASTM C 1227, AND ASTM C 564. COUPLINGS SHALL BE INSTALLED IN ACCORDANCE WITH THE MANUFACTURER'S BAND TIGHTENING SEQUENCE AND TORQUE RECOMMENDATIONS. TIGHTEN BANDS WITH A PROPERLY CALIBRATED TORQUE LIMITING DEVICE.
3. HEAVY DUTY COUPLINGS (BLUE SHIELD) SHALL BE USED FOR MAIN PIPING AND SHALL CONFORM TO ASTM C 1540, AND ASTM C 564. THIRD PARTY TESTING AND LISTING IS REQUIRED TO PROVE CONFORMANCE TO THE STANDARDS. COUPLINGS SHALL BE INSTALLED IN ACCORDANCE WITH THE MANUFACTURER'S BAND TIGHTENING SEQUENCE AND TORQUE RECOMMENDATIONS. TIGHTEN BANDS WITH A PROPERLY CALIBRATED TORQUE LIMITING DEVICE.
4. THE SYSTEM SHALL BE HYDROSTATICALLY TESTED AFTER INSTALLATION TO 10 FEET OF HEAD, OR AIR TEST TO 4.3 PSI.
1-1/2" AND SMALLER
2" AND LARGER
B. INTERIOR ABOVEGROUND SOIL, WASTE, VENT AND STORM DRAIN PIPING:
1. 3" AND LARGER - HUBLESS CAST-IRON PIPE AND FITTINGS.
2. 2" AND SMALLER - COPPER DWV TUBE, COPPER DRAINAGE FITTINGS, AND THREDED JOISTS.
C. INTERIOR DOMESTIC WATER PIPING:
3" AND SMALLER - TYPE L HARD TEMPERED COPPER WITH SOLDER END FITTINGS.
95-5 TIN AND ANTIMONY SOLDER JOINTING (LEAD-FREE). USE TYPE K FOR UNDERGROUND PIPING.
D. CONDENSATE DRAIN PIPING:
COPPER WATER TUBE ASTM B88, TYPE "M", SOLDER WITH 95-5 SOLDER, LEAD-FREE TYPE. CONDENSATE DRAIN PIPE IN CEILING SPACE SHALL BE INSULATED WITH 1/2" THICK ARMSTRONG ARMAFLEX, AND SECTIONS BUTTED FIRMLY TOGETHER.
E. THE FIRE-TEST RESPONSE CHARACTERISTIC OF ANY PIPING INSULATION SHALL HAVE A FLAME-SPREAD INDEX OF NOT MORE THAN 25 AND A SMOKE-DEVELOPED INDES OF NOT MORE THAN 50 WHEN TESTED IN ACCORDANCE WITH ASTM E 84 OR BY A TESTING AND INSPECTING AGENCY ACCEPTABLE TO AUTHORITIES HAVING JURISDICTION, OR REQUIRED BY LOCAL CODES.
F. DOMESTIC HOT WATER, TEMPERED WATER AND HOT WATER RETURN PIPING SHALL BE INSULATED WITH 1" THICK DENSITY GLASS FIBER INSULATION, HAVING FACTORY-APPLIED, SELF-SEALING ALL-SERVICE JACKET, MOLDED TO CONFORM TO PIPING, K-VALUE AT 75 DEGREES F, MAXIMUM 0.23 BTU-IN/HR-SQ.FT. DEGREES F.

2.02

PIPE FLASHINGS:
#4 LEAD WITH COUNTERFLASHING RING BY GLENCO, STONEMAN ENGINEERING OR APPROVED EQUAL.

2.03

VALVES:
A. GATE VALVES: RED & WHITE 204 OR EQUAL, 3" AND SMALLER.
B. CHECK VALVES: RED & WHITE 238 OR EQUAL, 3" AND SMALLER.
C. BALL VALVES: BRASS OR BRONZE BODY WITH CHROME -PLATED BRONZE BALL, MSS SP-110, RED & WHITE VALVE 5044F OR EQUAL.

2.04

PLUMBING FIXTURES AND TRIM:
PLUMBING FIXTURES TO BE FURNISHED AND INSTALLED UNDER THIS CONTRACT.
SEE PLUMBING FIXTURE SCHEDULE.

2.05

PIPE HANGERS AND SUPPORTS:
A. SUPERSTRUT, GRINNELL, OR APPROVED EQUAL.
B. INSTALLATION PER MANUFACTURER'S RECOMMENDATIONS.
C. ALL HANGERS BELOW DECK TO BE STAINLESS STEAL. ALL BOLTS AND THREADED ROLS SHALL HAVE DOUBLE NUTS FOR LOCKING

PART 3 INSTALLATION AND EXECUTION

3.01

GENERAL:
A. SUPPORT C.I. SOIL PIPING AT 5 FEET ON CENTER MAXIMUM AND EACH JOINT AND/OR FITTING. SUPPORT 1/2" AND 3/4" PIPING AT 6 FEET ON CENTER MAXIMUM. SUPPORT 1" TO 1- 1/2" PIPING AT 8 FEET ON CENTERS. SUPPORT 2" AND LARGER PIPING AT 10 FEET ON CENTER MAXIMUM. STEEL PIPING 4" AND LARGER MAY BE SUPPORTED AT 12 FEET ON CENTER MAXIMUM EXCEPT FOR VICTAULIC FITTED PIPING WHICH SHALL BE SUPPORTED AT 10 FEET ON CENTER MAXIMUM.

3.02

SPECIAL REQUIREMENTS, RESPONSIBILITIES AND TESTING:
A. INSTALL PIPING GENERALLY LEVEL, FREE OF TRAPS AND UNNECESSARY BENDS, TO CONFORM WITH BUILDING REQUIREMENTS. PIPE TO BE FREE OF DEFECTS, AND INSTALLED TO AVOID ANY POSSIBLE GALVANIC ACTION BY ISOLATING DISSIMILAR METALS.
B. TEST AND RECORD AVAILABLE DOMESTIC WATER PRESSURE IN STATIC AND DYNAMIC CONDITIONS FOR DYNAMIC TESTING RECORD PRESSURE AND FLOW RATE IN GALLONS PER MINUTE. TRANSMIT THIS INFORMATION TO THE ENGINEER BEFORE PROCEEDING WITH THE WORK.
C. PROVIDE ALL TESTS SPECIFIED HERE IN AFTER AND AS OTHERWISE REQUIRED. PROVIDE ALL TEST EQUIPMENT, INCLUDING TEST PUMPS, GAUGES, INSTRUMENTS AND OTHER EQUIPMENT REQUIRED. PRESSURE GAUGES USED SHALL BE GRADUATED IN INCREMENTS NOT GREATER THAN 5 POUNDS PER SQUARE INCH.. NO PLUMBING OR DRAINAGE SYSTEM OR PART THERE OF SHALL BE COVERED, CONCEALED, OR PUT INTO USE UNLESS IT HAS BEEN SPECIFIED. CONDUCT ALL TESTS IN THE PRESENCE OF THE OWNER'S REPRESENTATIVE, AND OBTAIN THE NECESSARY JURISDICTIONAL AUTHORITY INSPECTIONS.
D. APPLY A WATER TEST TO THE WASTE, AND VENT SYSTEMS WHETHER IN ITS ENTIRETY OR IN SECTIONS; IF APPLIED TO THE ENTIRE SYSTEM, TIGHTLY CLOSE ALL OPENINGS IN THE PIPING EXCEPT THE HIGHEST OPENING, AND FILL THE SYSTEM WITH WATER TO THE POINT OF OVERFLOW. IF THE SYSTEM IS TESTED IN SECTIONS, TIGHTLY PLUG EACH OPENING EXCEPT FOR THE HIGHEST OPENING OF THE SECTION UNDER TEST, AND FILL EACH SECTION WITH WATER, BUT TEST WITH NO LESS THAN A 10' HEAD OF WATER. IN TESTING SUCCESSIVE SECTIONS, TEST AT LEAST THE UPPER 10' OF THE NEXT PRECEDING SECTION SO THAT NO JOINT OR PIPE IN THE BUILDING (EXCEPT THE UPPERMOST 10' OF THE SYSTEM SHALL HAVE BEEN SUBMITTED TO A TEST OF LESS THAN A 10' HEAD OF WATER. KEEP WATER IN THE SYSTEM OR IN THE PORTION UNDER TEST FOR AT LEAST 24 HOURS BEFORE INSPECTION STARTS, WITH THE SYSTEM TIGHT AT ALL POINTS.
E. DOMESTIC WATER SYSTEM SHALL BE TESTED AND PROVED TIGHT UNDER A PRESSURE OF NOT LESS THAN 150 PSI. PIPING MUST STAND THE TEST FOR A PERIOD OF 24 HOURS WITHOUT LEAKING.
F. CHLORINATION OF THE DOMESTIC COLD AND HOT WATER PIPING SYSTEMS IN ACCORDANCE WITH STANDARD TESTING PROCEDURES AND LOCAL HEALTH DEPARTMENT REQUIREMENTS. TESTING BY A FIRM SUCH AS BENNET-MARINE OR EQUAL. SUBMIT CERTIFICATE OF SATISFACTORY TEST RESULTS.
G. UPON COMPLETION OF TESTING, CERTIFY TO THE ARCHITECT, IN WRITING THAT THE SPECIFIED TESTS HAVE BEEN PERFORMED AND THAT THE INSTALLATION COMPLIES WITH THE SPECIFIED REQUIREMENTS.

3.03

PIPING INSTALLATION:
A. MAKE CHANGES IN SIZE OF PIPE WITH REDUCING FITTINGS; BUSHINGS WILL NOT BE PERMITTED EXCEPT FOR BELL SHAPED COPPER BUSHINGS.
B. INSTALL DIELECTRIC INSULATING UNIONS IN WATER PIPING BETWEEN COPPER PIPING AND FERROUS PIPING OR EQUIPMENT - EPCO, OR EQUAL.
C. INSTALL EXPOSED POLISHED CHROME CONNECTIONS FROM FIXTURES OR EQUIPMENT WITH SPECIAL CARE. SHOW NO TOOL MARKS OR THREADS AT FITTINGS.
D. CAP OPENINGS IN PIPING DURING CONSTRUCTION.
E. PROVIDE 85%%% RED BRASS PIPE IPS, IN CONNECTION TO FAUCETS, FLUSH VALVES, HOSE BIBBS OR SIMILAR ITEMS REQUIRING RIGID PIPING. EXTEND BRASS PIPE FROM FIXTURE TO POINT WHERE PIPING CAN BE SECURELY FASTENED TO BUILDING CONSTRUCTION. ALL EXPOSED PIPING AND STOP VALVES IN CONNECTION TO FIXTURES SHALL BE CHROME PLATED BRASS.
F. INSTALL UNIONS ADJACENT TO VALVES AND WHERE NECESSARY TO FACILITATE DISASSEMBLY OF PIPING.
G. ESCUTCHEONS: FIT EXPOSED PIPES PASSING THROUGH FLOORS, WALLS OR CEILINGS WITH ESCUTCHEONS. MANUFACTURE SPECIAL SIZES OF ESCUTCHEONS FROM STEEL AND PRIME COAT SAME. CUT IN ROUND, RECTANGULAR OR SQUARE SPACE TO PROVIDE A CLEAN APPEARANCE ACCEPTABLE TO THE ARCHITECT.
H. SUPPORT PIPING INDEPENDENTLY OF EQUIPMENT TO WHICH IT IS CONNECTED.
I. MAKE COPPER SOLDER JOINTS WITH 95/5 SOLDER, OR SILFOS; CLEAN SURFACES TO BE JOINED FREE OF OIL, GREASE, RUST OR OXIDES AND APPLY FLUX TO EACH JOINT BEFORE HEATING ASSEMBLY.
J. ROUGH-IN AND MAKE FINAL CONNECTIONS TO ALL OTHER EQUIPMENT FURNISHED UNDER OTHER DIVISIONS, REQUIRING PLUMBING CONNECTIONS.

Cuschieri Horton Architects
1475 S. Bascom Ave, Suite 204
Campbell, California 95008
408.371.8200 Fx 408.371.8201

ACIES ENGINEERING
3371 Olcott Street
Santa Clara, CA 95054
ph: (408) 522-5255
fx: (408) 522-5260
info@acies.net

Copyright © 2019

PLUMBING CALCULATIONS AND SPECIFICATIONS

TOWN OF LOS GATOS
ENGINEERING BUILDING TI ~~AND STORAGE BUILDING~~
41 MILES AVENUE,
LOS GATOS, CA 95030

REVISIONS

NO.	ITEM	DATE

PERMIT #:

SUBMITTAL:
CITY SUBMITTAL SET

DRAWN BY:
CHECKED BY:

JOB NO: 1826
DATE: 12/04/19

SHEET NO.
P0.2

6/16/2020 1:17 PM

1	PLUMBING SITE PLAN	SCALE: 1/32" = 1'-0"

Cuschieri Horton Architects

1475 S. Bascom Ave, Suite 204
Campbell, California 95008
408.371.8200 Fx 408.371.8201

ACIES ENGINEERING
3371 Olcott Street
Santa Clara, CA 95054
ph: (408) 522-5255
fx: (408) 522-5260
info@acies.net

Copyright © 2019

REGISTERED PROFESSIONAL ENGINEER
No.M28498
Exp. 06/30/20
MECHANICAL
STATE OF CALIFORNIA

PLUMBING SITE PLAN

TOWN OF LOS GATOS
ENGINEERING BUILDING TI ~~AND STORAGE BUILDING~~
41 MILES AVENUE,
LOS GATOS, CA 95030

REVISIONS

NO.	ITEM	DATE

PERMIT #:

SUBMITTAL:
CITY SUBMITTAL SET
DRAWN BY:
CHECKED BY:
JOB NO: 1826
DATE: 12/04/19

SHEET NO.
P1.0

6/16/2020 1:17 PM

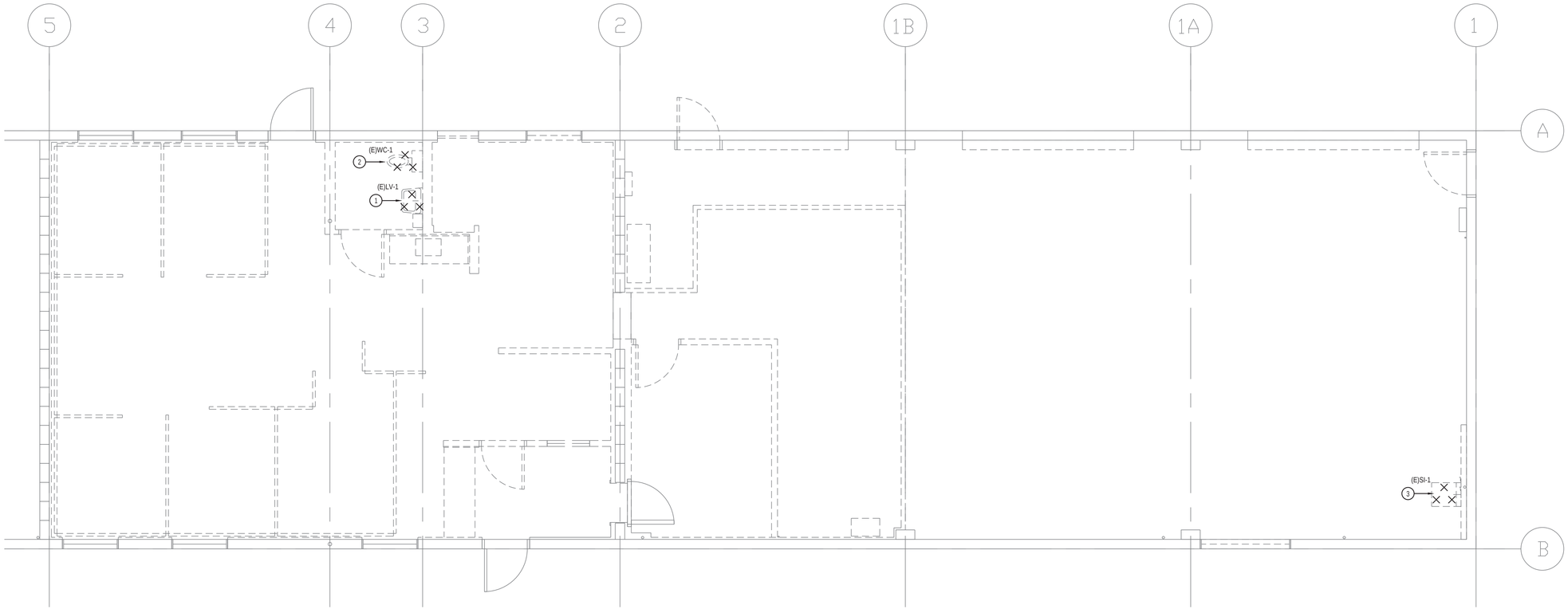

1	PLUMBING DEMOLITION ENGINEERING BUILDING REMODELING PLAN	SCALE: 1/4" = 1'-0"

SHEET NOTES

#	DESCRIPTION
1	EXISTING LAVATORY TO BE DEMOLISHED AND REPLACED WITH NEW. PLUMBING CONNECTIONS TO BE CAPPED OFF.
2	EXISTING WATER CLOSET TO BE DEMOLISHED AND REPLACED WITH NEW. PLUMBING CONNECTIONS TO BE CAPPED OFF.
3	EXISTING SINK TO BE DEMOLISHED. PLUMBING CONNECTIONS TO BE CAPPED OFF.

KEY PLAN

SHOWN ENLARGED AREA

Cuschieri Horton Architects
1475 S. Bascom Ave, Suite 204
Campbell, California 95008
408.371.8200 Fx 408.371.8201

ACIES ENGINEERING
3371 Olcott Street
Santa Clara, CA 95054
ph: (408) 522-5255
fx: (408) 522-5260
info@acies.net
Copyright © 2019

REGISTERED PROFESSIONAL ENGINEER
No.M28498
Exp. 06/30/20
MECHANICAL
STATE OF CALIFORNIA

PLUMBING DEMOLITION ENGINEERING BUILDING REMODELING

TOWN OF LOS GATOS
ENGINEERING BUILDING TI AND STORAGE BUILDING
41 MILES AVENUE,
LOS GATOS, CA 95030

REVISIONS

NO.	ITEM	DATE

PERMIT #:

SUBMITTAL:
CITY SUBMITTAL SET

DRAWN BY:

CHECKED BY:

JOB NO: 1826
DATE: 12/04/19

SHEET NO.
P1.1

6/16/2020 1:17 PM

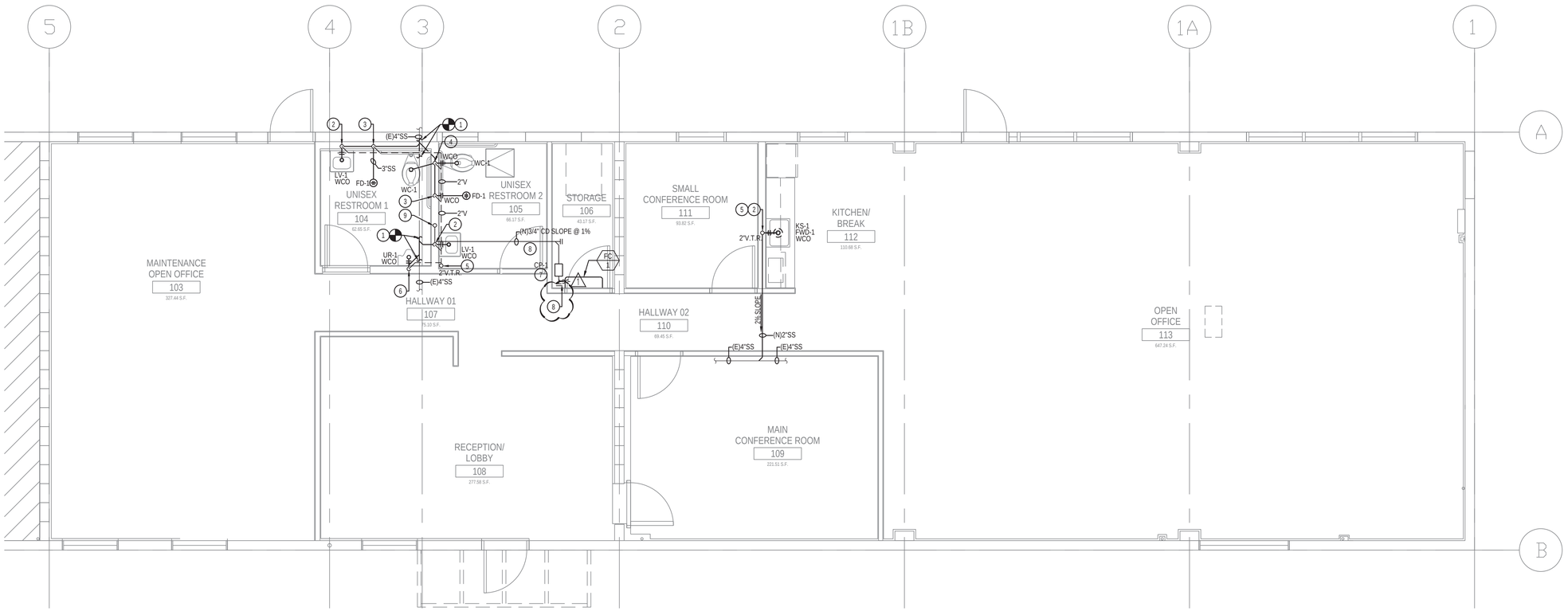

1 SANITARY SEWER AND VENT PLUMBING ENGINEERING BUILDING REMODELING PLAN SCALE: 1/4" = 1'-0"

SHEET NOTES

#	DESCRIPTION
1	EXTEND AS NEEDED AND CONNECT TO EXISTING WASTE LINE. VERIFY IN FIELD EXACT LOCATION SIZE AND INVERT ELEVATION OF EXISTING WASTE LINE.
2	2" WASTE AND 1-1/2" VENT UP FROM KITCHEN SINK (KS-1) / LAVATORY (LV-1).
3	3" WASTE AND 2" VENT UP FROM FLOOR DRAIN (FD-1).
4	4" WASTE AND 2" VENT UP FROM WATER CLOSET (WC-1).
5	2" VENT THRU ROOF.
6	3" WASTE AND 2" VENT UP FROM URINAL (UR-1).
7	3/4" CONDENSATE DRAIN LINE FROM HVAC FAIN COIL UNIT. DISCHARGE INTO LITTLE GIANT CONDENSATE PUMP AT THE CEILING. LITTLE GIANT 1/30 HP CONDENSATE REMOVAL PUMP, SMALL RESERVOIR, 115VAC, 3/8" BARB DISCHARGE SIZE.
8	PROVIDE 3/4" COPPER CONDENSATE DRAIN AT 1% SLOPE TOWARDS RESTROOM AND DISCHARGE INTO LAVATORY TAILPIECE. SEE DETAIL #7/P6.1.
9	3/4" CONDENSATE DRAIN FROM ROOF DISCHARGE INTO LAVATORY TAILPIECE. SEE DETAIL #7/P6.1.

KEY PLAN

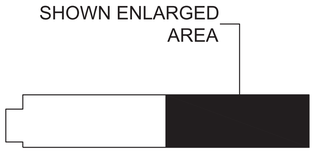

Cuschieri Horton Architects
1475 S. Bascom Ave, Suite 204
Campbell, California 95008
408.371.8200 Fx 408.371.8201

ACIES ENGINEERING
3371 Olcott Street
Santa Clara, CA 95054
ph: (408) 522-5255
fx: (408) 522-5260
info@acies.net
Copyright © 2019

REGISTERED PROFESSIONAL ENGINEER
No.M28498
Exp. 06/30/20
MECHANICAL
STATE OF CALIFORNIA

SANITARY SEWER AND VENT PLUMBING ENG. BUILDING REMODELING PLAN

TOWN OF LOS GATOS
ENGINEERING BUILDING TI ~~AND STORAGE BUILDING~~
41 MILES AVENUE,
LOS GATOS, CA 95030

REVISIONS

NO.	ITEM	DATE
1	RESPONSE TO FIRST REVIEW COMMENTS	07/17/20

PERMIT #:

SUBMITTAL:
CITY SUBMITTAL SET
DRAWN BY:
CHECKED BY:
JOB NO: 1826
DATE: 12/04/19

SHEET NO.
P2.1

6/16/2020 1:17 PM

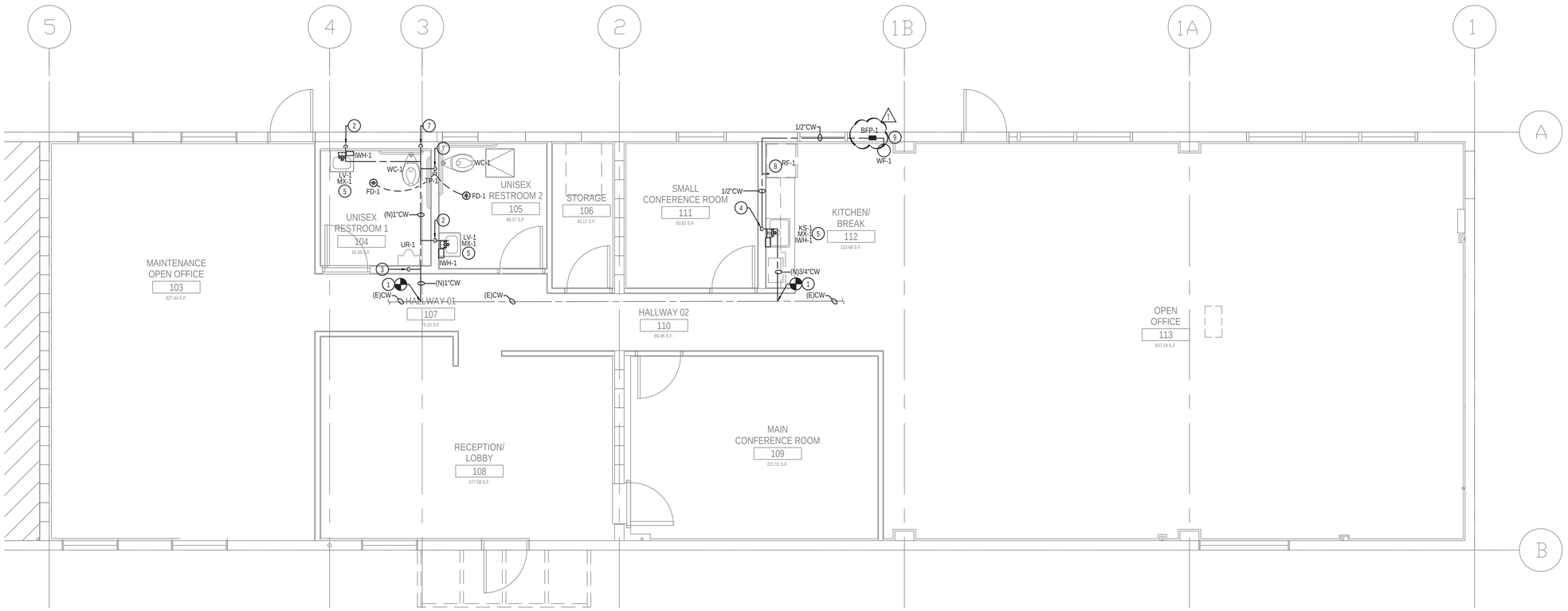

1 | DOMESTIC WATER AND GAS PLUMBING ENGINEERING BUILDING REMODELING PLAN | SCALE: 1/4" = 1'-0"

SHEET NOTES

#	DESCRIPTION
1	EXTEND AS NEEDED AND CONNECT TO COLD WATER LINE. VERIFY IN FIELD EXACT LOCATION AND SIZE OF EXISTING COLD WATER LINE.
2	1/2" COLD WATER DOWN AND CONNECT TO LAVATORY SINK (LV-1).
3	3/4" COLD WATER DOWN AND CONNECT TO WALL MOUNTED URINAL (UR-1).
4	3/4" COLD WATER LINE DOWN.
5	INSTALL THERMOSTATIC MIXING VALVE BELOW LAVATORY (LV-1)/ KITCHEN SINK (KS-1) AT ACCESSIBLE LOCATION.
6	1/2" COLD WATER DOWN TO TRAP PRIMER FOR FLOOR DRAIN. INSTALL TRAP PRIMING VALVE AT LEAST 12" ABOVE FINISHED FLOOR WITH BALL VALVE. PROVIDE TRAP PRIMER , P.P.P. MODEL # P2-500 OR EQUAL.
7	PROVIDE 1" COLD WATER LINE CONNECTION TO NEW WATER CLOSET(WC-1).
8	PROVIDE 1/2" COLD WATER LINE CONNECTION TO NEW REFRIGERATOR (RF-1).
9	PROVIDE 1/2" COLD WATER LINE CONNECTION TO WATER FILTER STATION (WF-1).

KEY PLAN

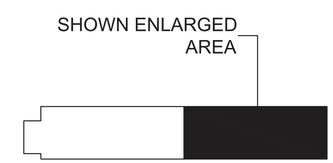

Cuschieri Horton Architects
1475 S. Bascom Ave, Suite 204
Campbell, California 95008
408.371.8200 Fx 408.371.8201

ACIES ENGINEERING
3371 Olcott Street
Santa Clara, CA 95054
ph: (408) 522-5255
fx: (408) 522-5260
info@acies.net
Copyright © 2019

REGISTERED PROFESSIONAL ENGINEER
No.M28498
Exp. 06/30/20
MECHANICAL
STATE OF CALIFORNIA

DOMESTIC WATER AND GAS PLUMBING ENG. BUILDING REMODELING PLAN

TOWN OF LOS GATOS
ENGINEERING BUILDING TI ~~AND STORAGE BUILDING~~
41 MILES AVENUE,
LOS GATOS, CA 95030

REVISIONS

NO.	ITEM	DATE
1	RESPONSE TO FIRST REVIEW COMMENTS	07/17/20

PERMIT #:

SUBMITTAL:
CITY SUBMITTAL SET
DRAWN BY:
CHECKED BY:
JOB NO: 1826
DATE: 12/04/19

SHEET NO.
P3.1

6/16/2020 1:17 PM

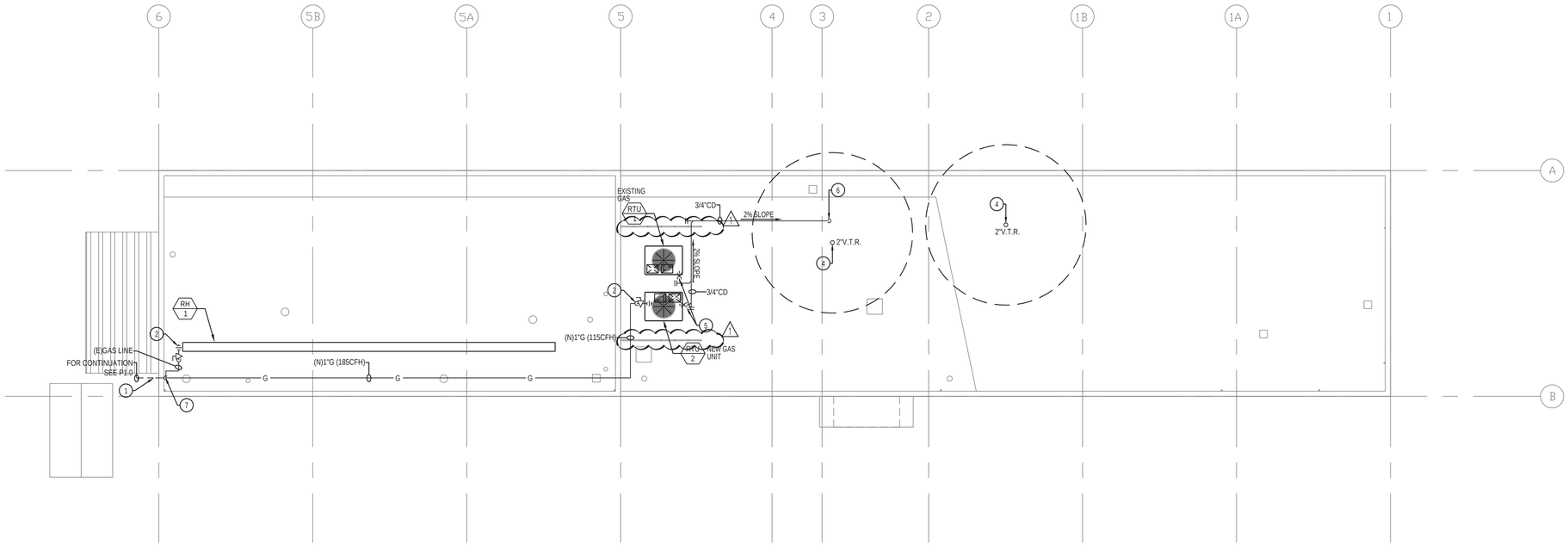

1	PLUMBING ROOF ENGINEERING BUILDING REMODELING PLAN	SCALE: 1/8" = 1'-0"

SHEET NOTES

#	DESCRIPTION
1	(E) 1-1/2" GAS LINE RISER FROM GROUND UP TO CEILING OF THE MACHINE SHOP.
2	1" GAS LINE UP TO RTU-2 (115 CFH). PROVIDE GAS CONNECTION WITH SHUT OFF VALVE.
3	SHOWN EXISTING GAS LINE CONNECTION TO RADIANT HEATER.
4	2" VENT THRU ROOF.
5	3/4" CONDENSATE DRAIN FROM RTU. RUN CONDENSATE LINE WITH 2% SLOPE.
6	3/4" CONDENSATE DRAIN DOWN TO GROUND FLOOR AND DRAIN TO LAVATORY TAILPIECE. FOR CONTINUATION SEE P2.1.
7	RUN NEW GAS LINE AT THE CEILING OF THE MACHINE SHOP. TIE INTO EXISTING 1-1/2" GAS LINE RISER.

KEY PLAN

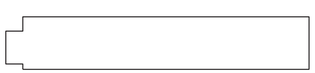

Cuschieri Horton Architects
1475 S. Bascom Ave, Suite 204
Campbell, California 95008
408.371.8200 Fx 408.371.8201

ACIES ENGINEERING
3371 Olcott Street
Santa Clara, CA 95054
ph: (408) 522-5255
fx: (408) 522-5260
info@acies.net

Copyright © 2019

REGISTERED PROFESSIONAL ENGINEER
No.M28498
Exp. 06/30/20
MECHANICAL
STATE OF CALIFORNIA

PLUMBING ROOF ENGINEERING BUILDING REMODELING PLAN

TOWN OF LOS GATOS
ENGINEERING BUILDING TI AND STORAGE BUILDING
41 MILES AVENUE,
LOS GATOS, CA 95030

REVISIONS

NO.	ITEM	DATE
1	RESPONSE TO FIRST REVIEW COMMENTS	07/17/20

PERMIT #:

SUBMITTAL:
CITY SUBMITTAL SET

DRAWN BY:

CHECKED BY:

JOB NO: 1826
DATE: 12/04/19

SHEET NO.
P4.1

6/16/2020 1:17 PM

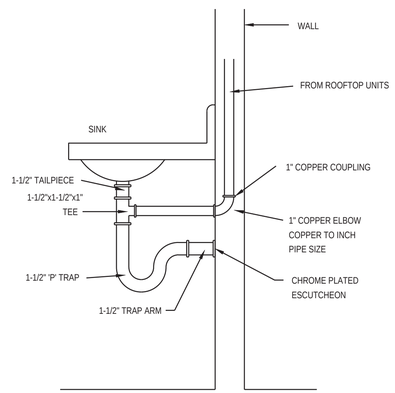

7	CONDENSATE DRAIN CONNECTION TO LAVATORY TAILPIECE DETAIL	NTS

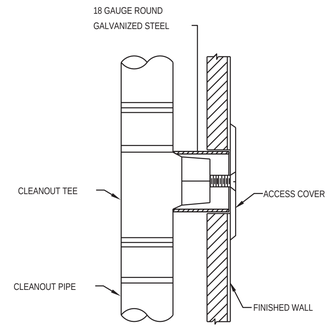

4	WALL CLEANOUT DETAIL	NTS

MAXIMUM PIPE/TUBING SUPPORT SPACING, FEET								
NOM. SIZE	THRU 1"	1	11/4	11/2	2	21/2	3	4
PIPE	7 FT	7	7	9	10	11	12	14
TUBING	5 FT	6	7	8	8	9	10	12
NOTE: FOR TRAPEZE HANGER TAKE SPACING OF SMALLEST SIZE ON TRAPEZE.								

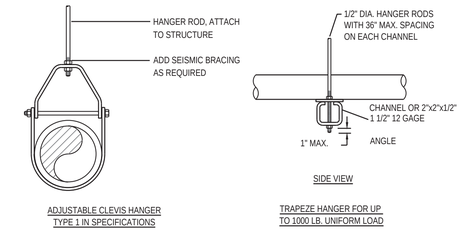

1	PIPE SUPPORT DETAIL	NTS

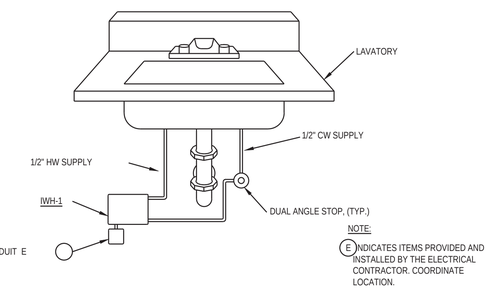

8	INSTANTANEOUS HOT WATER HEATER DETAIL	NTS

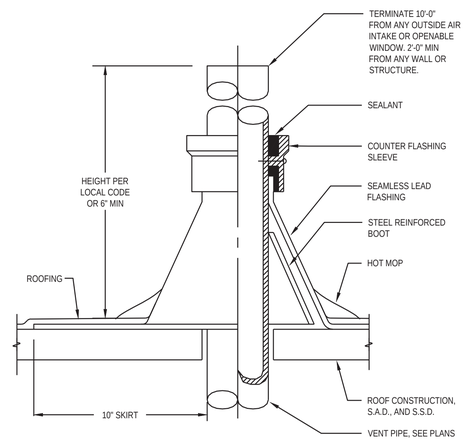

5	VENT THROUGH ROOF DETAIL	NTS

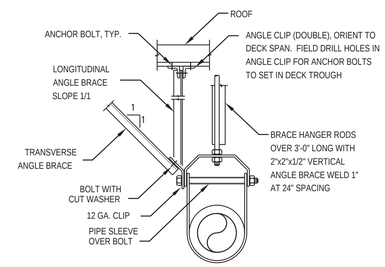

PIPE SIZE	ANGLE BRACE *	BOLT TO ANGLE	ANGLE CLIP **	ANCHOR BOLTS OR INSERTS ***
2"	2"x2" 16 GA.	1/2"	3"x3"x1/2"x1'-4"	1/2
3, 4	2"x2" 16 GA.	1/2"	3"x3"x1/2"x1'-4"	1/2
5, 6	2.5"x2.5" 16 GA.	1/2"	5"x3"x1/2"x1'-4"	1/2
8	3"x3" 12 GA.	1/2"	2-5x3x1/2x1'-4"	2
10	3"x3" 12 GA.	1"	2-5x3x1/2"x1'-4"	2

* 2"x 2"x12 GA. CHANNEL MAY BE USED

** BENT PLATE OF EQUAL THICKNESS MAY BE SUBSTITUTED FOR LONGITUDINAL ANGLE CLIP TO FACILITATE ANCHORAGE TO SLAB TROUGHS. PROVIDE EQUAL NUMBER OF ANCHOR BOLTS TO THAT SHOWN.

*** PROVIDE MINIMUM EMBEDMENT OF 1 1/2" ABOVE TOP OF METAL DECK FOR ALL ANCHOR BOLTS.

2	PIPE HANGER DETAIL	NTS

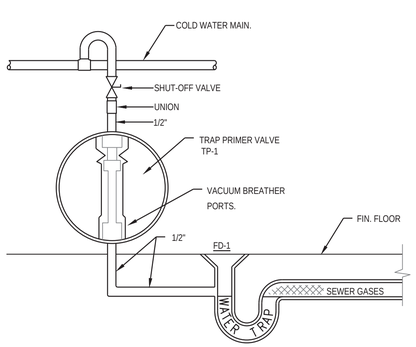

9	TRAP PRIMER DETAIL	NTS

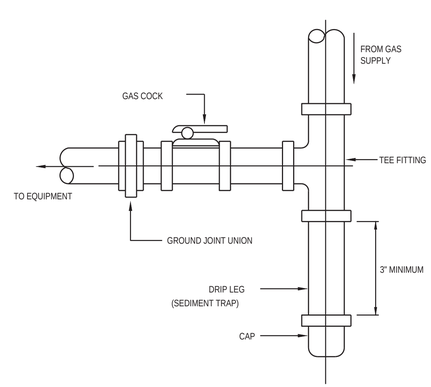

6	GAS PIPE CONNECTION DETAIL	NTS

NOTE: WHERE PIPING IS EXPOSED AT FINISHED WALLS, FLUSH MOUNT SLEEVE AND PROVIDE ESCUTCHEON PLATE.

NOTES:
1. TYP FOR NON-INSULATED PIPE
2. TYP FOR MASONRY OR CONCRETE WALL

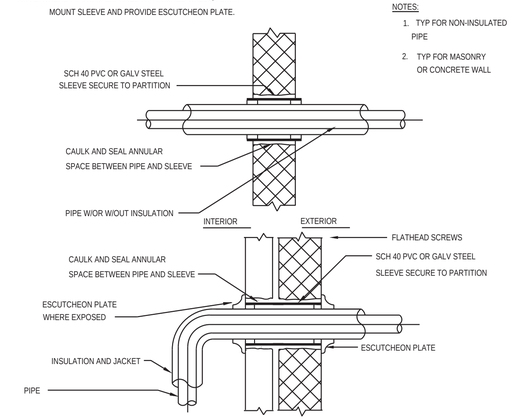

3	PIPE PENETRATION THRU WALLS DETAIL	NTS

Cuschieri Horton Architects
1475 S. Bascom Ave, Suite 204
Campbell, California 95008
408.371.8200 Fx 408.371.8201

ACIES ENGINEERING
3371 Olcott Street
Santa Clara, CA 95054
ph: (408) 522-5255
fx: (408) 522-5260
info@acies.net

Copyright © 2019

REGISTERED PROFESSIONAL ENGINEER
No.M28498
Exp. 06/30/20
MECHANICAL
STATE OF CALIFORNIA

PLUMBING DETAILS – I

TOWN OF LOS GATOS
ENGINEERING BUILDING TI ~~AND STORAGE BUILDING~~
41 MILES AVENUE,
LOS GATOS, CA 95030

REVISIONS

NO.	ITEM	DATE

PERMIT #:

SUBMITTAL:
CITY SUBMITTAL SET
DRAWN BY:
CHECKED BY:
JOB NO: 1826
DATE: 12/04/19

SHEET NO.
P6.1

6/16/2020 1:17 PM

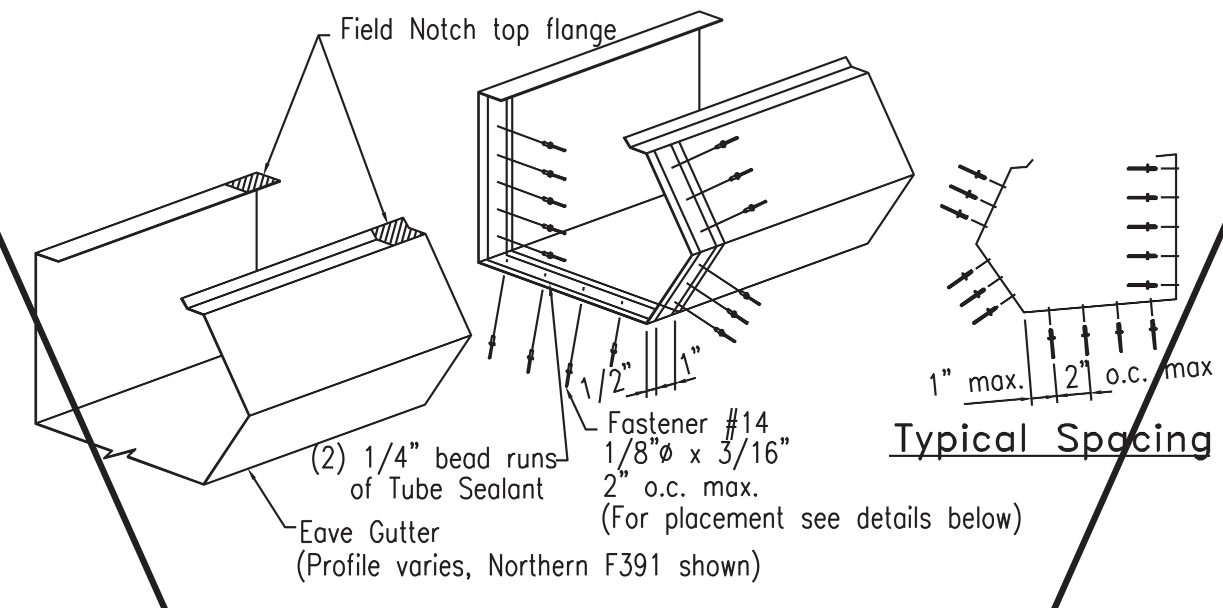

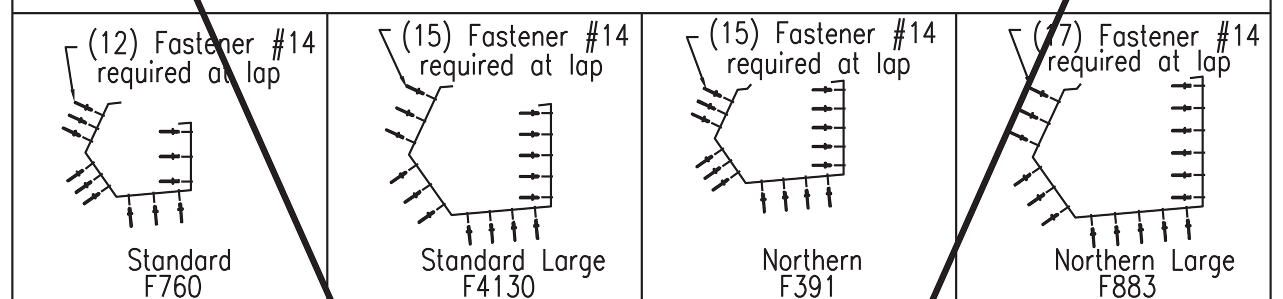

Eave Gutter End Lap Installation – PBR Roof

Classic Trim Profile

TRIM_90

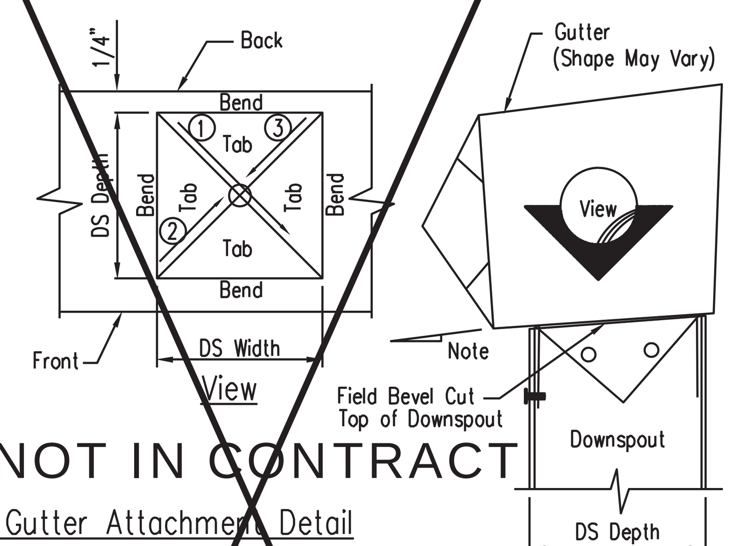

NOT IN CONTRACT

Downspout To Gutter Attachment Detail

1. Refer to the building erection drawings for the location and spacing of the downspouts.
2. Locate all downspouts over a major panel rib if possable.
3. Make a cardboard template of the downspout shape . Place the template on the bottom of the gutter and trace the outline. Remove the template and draw a line from corner to corner, forming an "X" pattern.
4. Drill a whole at the center of the "X". Using tin snips, cut along the lines of the X only. Do not cut along the outside lines of the downspout square.
5. Bend each triangular tab down toward the ground, 90 Degrees to the bottom of the gutter.
6. Position the top of the downspout under the gutter. Make sure all four gutter tabs are on the inside of the downspout.
7. Install Fastener #14 through the downspout into the gutter tab. Only the two sides and the front of the downspout will receive fasteners.

TRIM_98

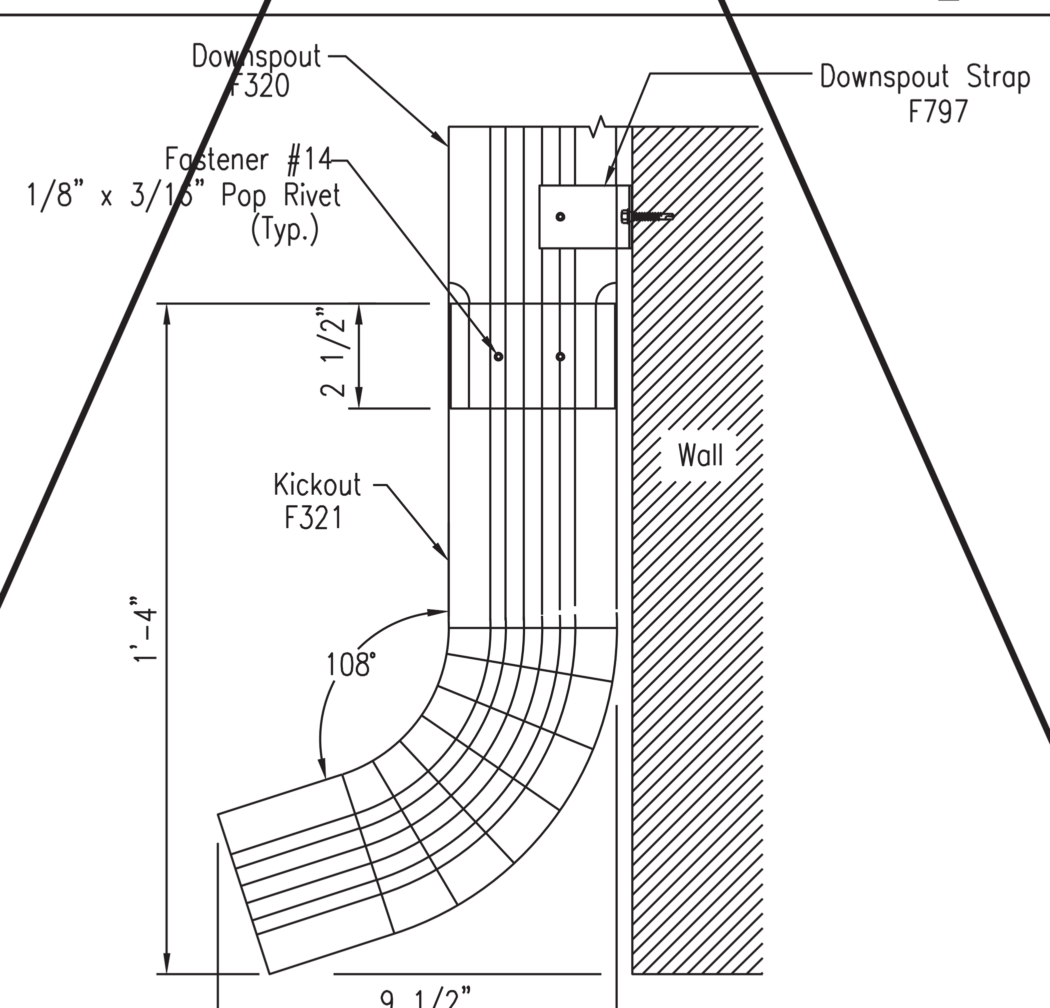

Downspout Kickout

4" x 5" Roll-Form

TRIM_123

7	GUTTER AND DOWNSPOUT DETAILS	NTS

System No.W-L-2299
May 19, 2005
F Ratings - 1 & 2 Hr (See Item 1)
T Rating - 0 Hr

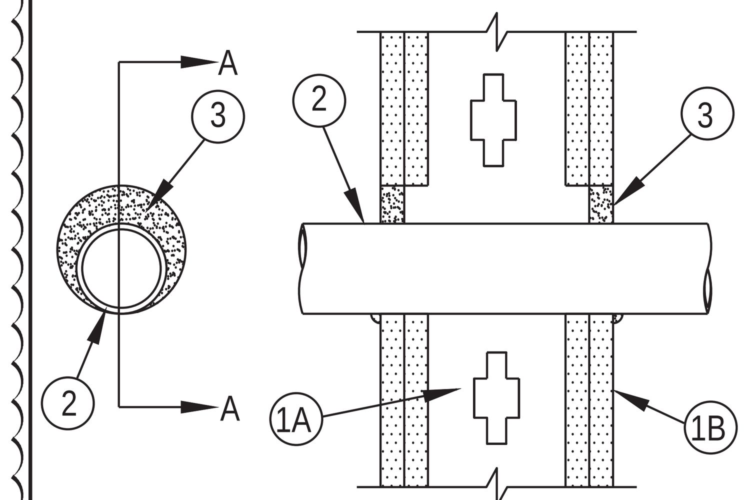

W-L-2299

3M Fire Protection Products

1. Wall Assembly - The 1 or 2 hr fire rated gypsum board/stud wall assembly shall be constructed of the materials and in the manner described in the individual U300, U400 or V400 Series Wall or Partition Design in the UL Fire Resistance Directory and shall include the following construction features:

A. Studs - Wall framing may consist of either wood studs or steel channel studs. Wood studs to consist of nom 2 in. by 4 in. (51 mm by 102 mm) lumber spaced 16 in. (406 mm) OC. Steel studs to be min 3-1/2 in. wide (89 mm) spaced max 24 in. (610 mm) OC.
B. Gypsum Board* - The gypsum board type, thickness, number of layers, fastener type and sheet orientation shall be as specified in the individual U300 or U400 Series Design in the UL Fire Resistance Directory. Max diam of opening is 3-1/2 in. (89 mm).

The hourly F Rating of the firestop system is equal to the hourly fire rating of the wall assembly in which it is installed.

2. Through Penetrants - One nonmetallic pipe or conduit installed eccentrically or concentrically within opening. Annular space between penetrant and periphery of opening to be min 0 in. (point contact) to max 1-1/8 in. (0 mm to max 29 mm). Penetrant to be rigidly supported on both sides of wall. The following types and sizes of penetrants may be used:

A. Polyvinyl Chloride (PVC) Pipe - Nom 2 in. (51 mm) diam (or smaller) Schedule 40 solid core or cellular core PVC pipe for use in closed (process or supply) or vented (drain, waste or vent) piping system.
B. Chlorinated Polyvinyl Chloride (CPVC) Pipe - Nom 2 in. (51 mm) diam (or smaller) SDR13.5 CPVC pipe for use in closed (process or supply) piping systems.
C. Rigid Nonmetallic Conduit+ - Nom 2 in. (51 mm) diam (or smaller) Schedule 40 PVC conduit installed in accordance with Article 347 of the National Electrical Code (NFPA No. 70).
D. Acrylonitrile Butadiene Styrene (ABS) Pipe - Nom 1-1/2 in. (38 mm) diam (or smaller) Schedule 40 solid core or cellular core ABS pipe for use in closed (process or supply) or vented (drain, waste or vent) piping systems.
E. Electrical Nonmetallic Tubing (ENT)+ - Nom 1-1/4 in (32 mm) diam (or smaller) ENT installed in accordance with Article 331 of the National Electrical Code (NFPA No. 70).

See Electrical Nonmetallic Tubing (FKHU) category in the Electrical Construction Materials Directory for names of manufacturers.

3. Fill,Void or Cavity Material* - Caulk or Sealant - Min 5/8 in. (16 mm) thickness of caulk applied within annulus, flush with both surfaces of wall. Min 1/4 in. (6 mm) diam bead of caulk applied to gypsum board/penetrant interface at point contact location on both sides of wall.

3M COMPANY - IC 15WB+, CP 25WB+ caulk or FB-3000 WT sealant
(Note: CP 25WB+ not suitable for use with CPVC pipes.)

*Bearing the UL Classification Marking
+Bearing the UL Listing Mark

4	FIRE STOP PIPE PENETRATION THROUGH WALL	NTS

System No. W-L-1296
February 14, 2008
T Ratings - 0 and 1/4 Hr (See Item 1)
F Ratings - 1 and 2 Hr (See Item 1)

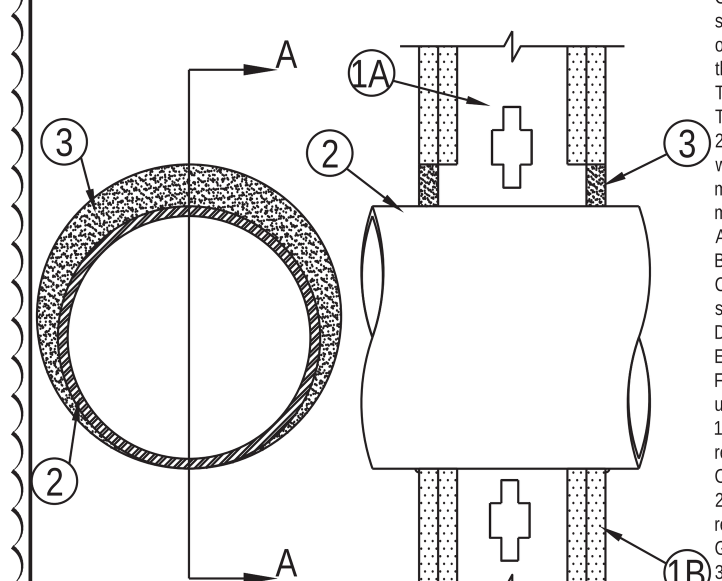

W-L-1296
3M Fire Protection Products

1. Wall Assembly - The 1 or 2 hr fire rated gypsum board/stud wall assembly shall be constructed of the materials and in the manner described in the individual U300, U400 or V400 Series Wall and Partition Design in the UL Fire Resistance Directory and shall include the following construction features:
A. Studs - Wall framing may consist of either wood studs or steel channel studs. Wood studs to consist of nom 2 by 4 in. (51 by 102 mm) lumber spaced 16 in. (406 mm) OC. Steel studs to be min 3-1/2 in. (89 mm) wide spaced max 24 in. (610 mm) OC.
B. Gypsum Board* - The gypsum board type, thickness, number of layers, fastener type and sheet orientation shall be as specified in the individual U300, U400 or V400 Series Design in the UL Fire Resistance Directory. Max diam of opening is 10-5/8 in. (270 mm).
C. Steel Sleeve - (Optional, Not Shown) - Cylindrical sleeve fabricated from min 0.019 in. thick (0.48 mm) galv sheet steel and having a min 2 in. (51 mm) lap along the longitudinal seam. Length of steel sleeve to be equal to thickness of wall. Sleeve installed by coiling the sheet steel to a diam smaller than the through opening, inserting the coil through the openings and releasing the coil to let it uncoil against the circular cutouts in the gypsum wallboard layers.
The hourly F Rating of the firestop system is equal to the hourly fire rating of the wall assembly in which it is installed. The hourly T Rating is 0 and 1/4 Hr for 1 and 2 Hr rated assemblies, respectively.
2. Through Penetrants - One metallic pipe, conduit, tubing or flexible metal pipe installed concentrically or eccentrically within opening. Annular space between penetrant and periphery of opening to be min 0 in. (0 mm point contact) to max 2 in. (51 mm). Penetrant to be rigidly supported on both sides of wall. The following types and sizes of penetrants may be used:
A. Steel Pipe - Nom 8 in. (203 mm) diam (or smaller) Schedule 5 (or heavier) steel pipe.
B. Iron Pipe - Nom 8 in. (203 mm) diam (or smaller) cast or ductile iron pipe.
C. Conduit - Nom 4 in. (102 mm) diam (or smaller) steel electrical metallic tubing (EMT) or nom 6 in. (152 mm) rigid steel conduit.
D. Copper Tubing - Nom 4 in. (102 mm) diam (or smaller) Type L (or heavier) copper tubing.
E. Copper Pipe - Nom 4 in. (102 mm) diam (or smaller) Regular (or heavier) copper pipe.
F. Through Penetrating Product* - Flexible Metal Piping - The following types of steel flexible metal gas piping may be used:
1. Nom 2 in. (51 mm) diam (or smaller) steel flexible metal gas piping. Plastic covering on piping may or may not be removed onboth sides of floor or wall assembly.
OMEGA FLEX INC
2. Nom 1 in. (25 mm) diam (or smaller) steel flexible metal gas piping. Plastic covering on piping may or may not be removed onboth sides of floor or wall assembly.
GASTITE, DIV OF TITEFLEX
3. Nom 1 in. (25 mm) diam (or smaller) steel flexible metal gas piping. Plastic covering on piping may or may not be removed onboth sides of floor or wall assembly.
WARD MFG INC
3. Fill, Void or Cavity Material* - Caulk or Sealant - Min 5/8 in. (16 mm) thickness of caulk applied within annulus, flush with both
surfaces of wall. Min 1/4 in. (6 mm) diam bead of caulk applied to gypsum board/penetrant interface at point contact location on both sides of wall.
3M COMPANY - IC 15WB+, CP 25WB+ caulk or FB-3000 WT sealant

*Bearing the UL Classification Mark

5	FIRE STOP PIPE PENETRATION THROUGH WALL	NTS

System No. C-AJ-1044
March 15, 2007
T Rating - 0 Hr
F Ratings - 2, 3, and 4 Hr (See Items 2A and 4)
L Rating At Ambient - 2 CFM/sq ft
L Rating At 400°F - less than 1 CFM/sq ft
W Rating - Class 1 (See Item 4)

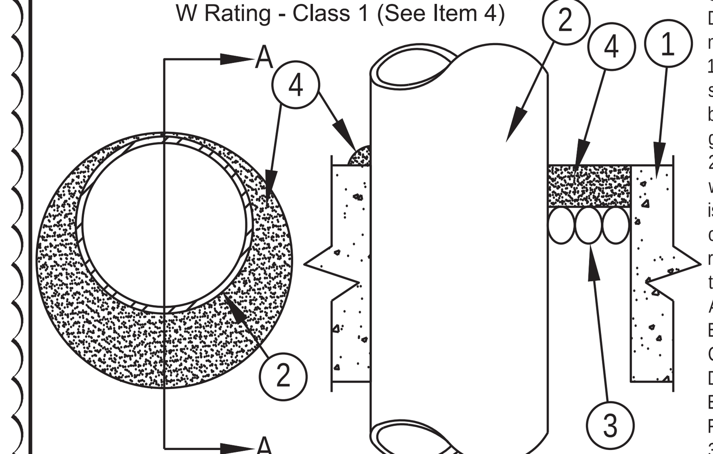

C-AJ-1044
3M Fire Protection Products

Min Floor or Wall Thkns In. (mm)	Nom Pipe Tube or Conduit Diam in. (mm)	Max Annular Space in. (mm)	Min Caulk Thkns in. (mm)	F Rating Hr
2-1/2 (64)	1/2-12 (13-305)	1-3/8 (35)	1/2 (13)	2
2-1/2 (64)	1/2-12 (13-305)	3-1/4 (83)	1 (25)	2
4-1/2 (114)	1/2-6 (13-152)	1-3/8 (35)	1/4 (6) (a)	2
4-1/2 (114)	1/2-12 (13-305)	1-1/4 (32)	1/2 (13)	3
4-1/2 (114)	1/2-20 (13-508)	2 (51)	1 (25)	3
4-1/2 (114)	1/2-20 (13-508)	2 (51)	1 (25)	3
4-1/2 (114)	1/2-12 (13-305)	3-1/4 (83)	1 (25)	3
4-1/2 (114)	22-30 (558-762)	2 (51)	2 (51)	3
5-1/2 (140)	1/2-6 (13-152)	1-3/8 (35)	1 (25) (b)	4

1. **Floor or Wall Assembly** - Lightweight or normal weight (100-150 pcf or 1600-2400 kg/m³) concrete. Except as noted in table under Item 4, min thickness of solid concrete floor or wall assembly is 4-1/2 in. (114 mm). Floor may also be constructed of any min 6 in.(152 mm) thick UL Classified hollow core **Precast Concrete Units***. When floor is constructed of hollow core precast concrete units, packing material (Item 3) and caulk fill material (Item 4) to be installed symmetrically on both sides of floor, flush with floor surface. Wall assembly may also be constructed of any UL Classified **Concrete Blocks***. Max diam of opening in solid lightweight or normal weight concrete floor is 32 in. (813 mm). Max diam of opening in floor constructed of hollow-core precast concrete units is 7 in. (178 mm)
See **Concrete Blocks** (CAZT) and **Precast Concrete Units** (CFTV) categories in the Fire Resistance Directory for names of
manufacturers.
1A. **Steel Sleeve** - (Optional, Not Shown) - Nom 16 in. (406 mm) diam (or smaller) Schedule 10 (or heavier) steel sleeve cast or grouted into floor or wall assembly. Sleeve may extend a max of 2 in. (51 mm) above top of floor or beyond either surface of wall. As an alternate, nom 16 in. (406 mm) diam (or smaller) min 0.028 (0.71 mm) thick galvanized sheet steel sleeve cast or grouted into floor or wall assembly flush with floor or wall surfaces.
2. **Through Penetrants** - One metallic pipe, conduit or tubing to be installed either concentrically or eccentrically within the firestop system. Max annular space between pipe, conduit or tubing and edge of through opening or sleeve is dependent on the parameters shown in Item 4. Min annular space between pipe or conduit and edge of through opening is 0 in. (point contact). Max annular space to be as shown in the table in Item 4. Pipe, conduit or tubing to be rigidly supported on both sides of floor or wall assembly. The following types and sizes of metallic pipes, conduits or tubing may be used:
A. **Steel Pipe** - Nom 30 in. (762 mm) diam (or smaller) Schedule 10 (or heavier) steel pipe.
B. **Iron Pipe** - Nom 30 in. (762 mm) diam (or smaller) cast or ductile iron pipe.
C. **Conduit** - Nom 6 in. (152 mm) diam (or smaller) rigid steel conduit.
D. **Conduit** - Nom 4 in. (102 mm) diam (or smaller) steel electrical metallic tubing.
E. **Copper Tubing** - Nom 6 in. (152 mm) diam (or smaller) Type L (or heavier) copper tube.
F. **Copper Pipe** - Nom 6 in. (152 mm) diam (or smaller) Regular (or heavier) copper pipe.
3. **Packing Material** - Polyethylene backer rod or nom 1 in. (25 mm) thickness of tightly-packed mineral wool batt or glass fiber insulation firmly packed into opening as a permanent form. Packing material to be recessed from top surface of floor or from both surfaces of wall as required to accommodate the required thickness of caulk fill material (Item 4).
3A. **Forming Material*** - As an alternate to the packing material in Item 3, nom 4 in. (102 mm) wide strips of min 1/2 in (13 mm) thick compressible mat to be stacked to a thickness greater than the width of the annular space and compression-fitted, edge-first, to fill the annular space to a min 4 in. (102 mm) depth. As an option, the strips of min 1/2 in. (13mm) thick compressible mat may be folded in half, lengthwise, and stacked to a thickness greater than the width of the annular space and compression-fitted, edge-first, to fill the annular space to a min 2 in. (51 mm) depth. Top of forming material to be recessed from top surface of floor or from both surfaces of wall as necessary to accommodate the required thickness of caulk fill material.
3M COMPANY - Fire Barrier Packing Material
4. **Fill, Void or Cavity Material*** - **Caulk, Sealant** - Applied to fill the annular space flush with top surface of floor. In wall assemblies, required caulk thickness to be installed symmetrically on both sides of wall, flush with wall surface. At point contact location between penetrant and sleeve or between penetrant and concrete, a min 1/4 in. (6 mm) diam bead of caulk shall be applied at top surface of floor and at both surfaces of wall. The hourly F Ratings and the min required caulk thicknesses are dependent upon a number of parameters, as shown in the following table:

6	FIRE STOP PIPE PENETRATION THROUGH FLOOR	NTS

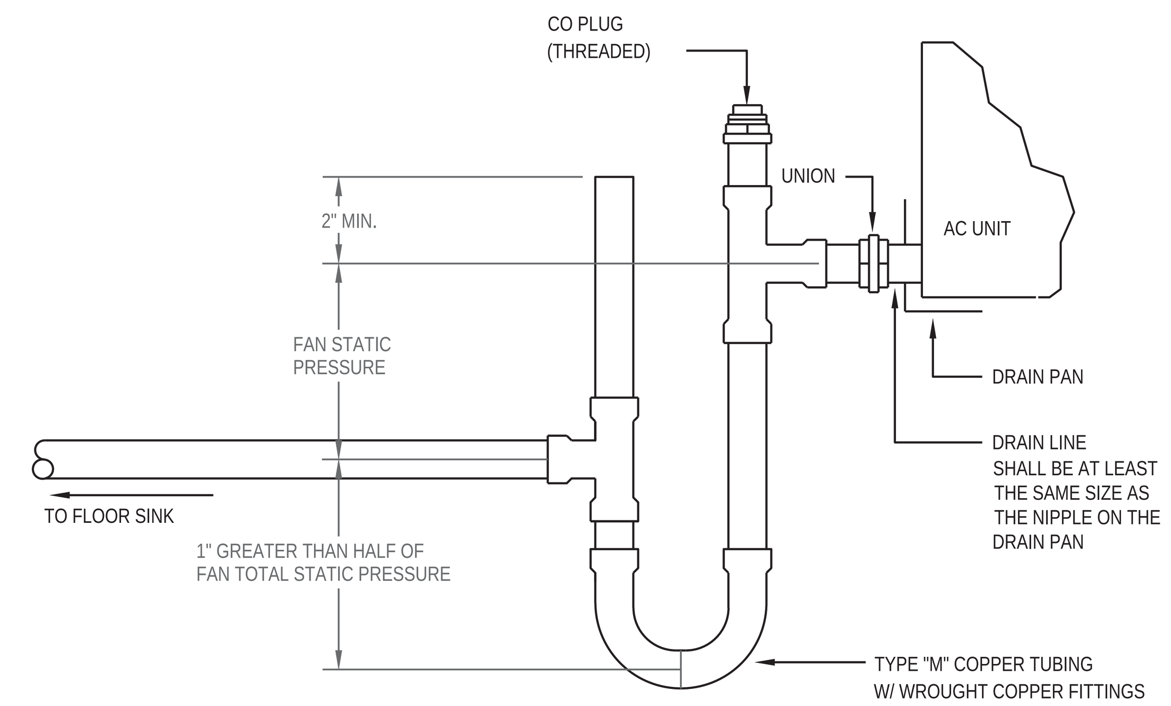

1	CONDENSATE DRAIN TRAP DETAIL	NTS

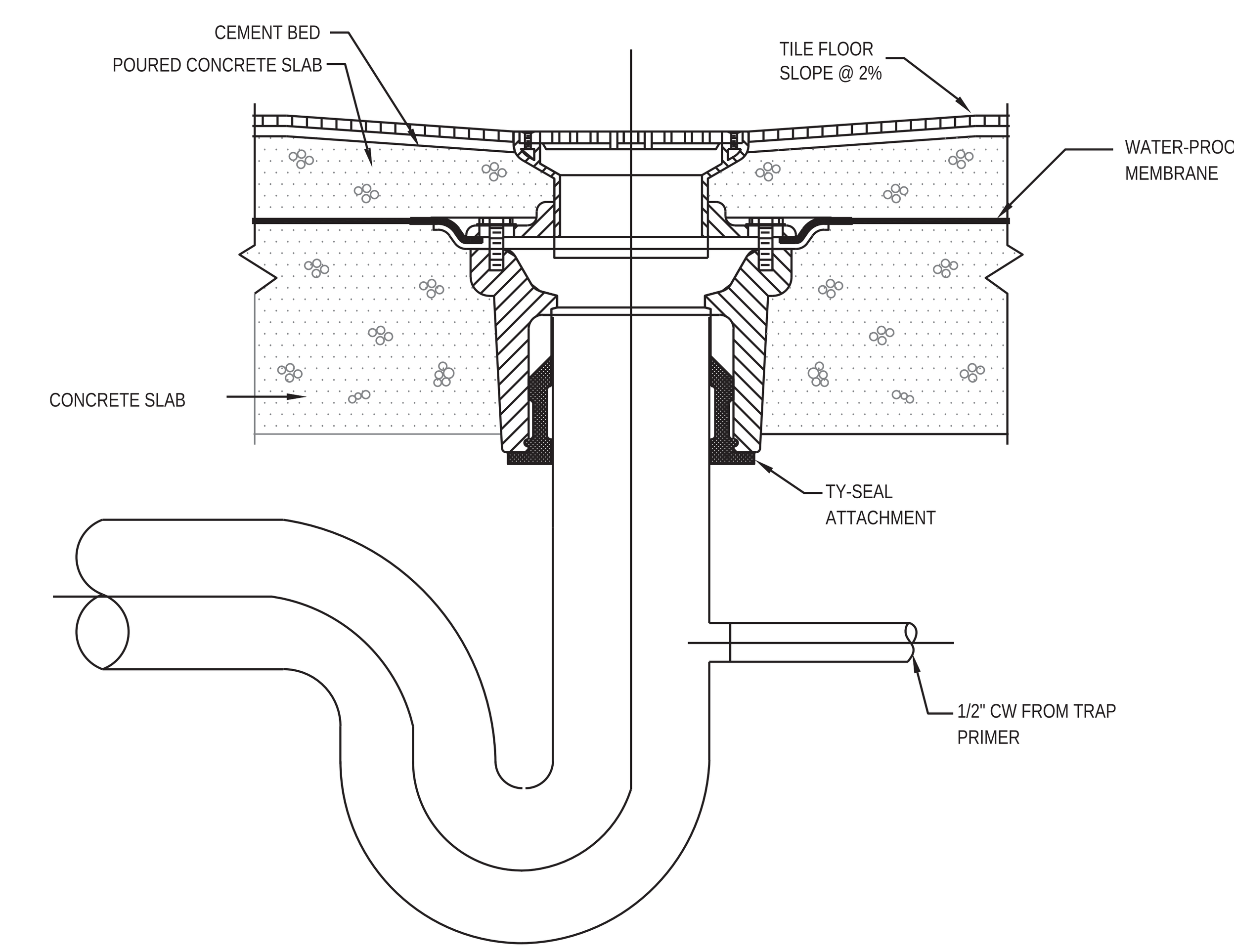

2	FLOOR DRAIN DETAIL	NTS

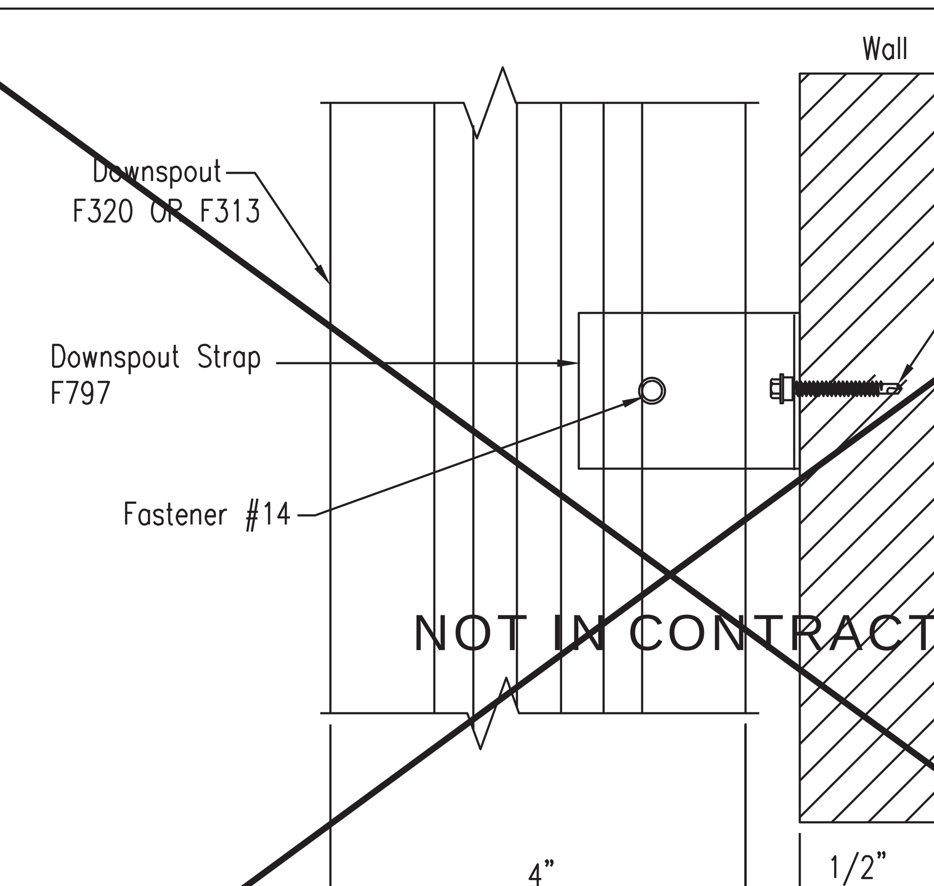

NOT IN CONTRACT

Downspout Strap Attachment Detail

4" x 5" Roll-Form

TRIM_81

3	DOWNSPOUT STRAP ATTACHMENT DETAIL	NTS

Cuschieri Horton Architects
1475 S. Bascom Ave, Suite 204
Campbell, California 95008
408.371.8200 Fx 408.371.8201

ACIES ENGINEERING
3371 Olcott Street
Santa Clara, CA 95054
ph: (408) 522-5255
fx: (408) 522-5260
info@acies.net

Copyright © 2019

REGISTERED PROFESSIONAL ENGINEER STOJAN G. REBRACA No.M28498 Exp. 06/30/21 MECHANICAL STATE OF CALIFORNIA

PLUMBING DETAILS – II

TOWN OF LOS GATOS
ENGINEERING BUILDING TI ~~AND STORAGE BUILDING~~
41 MILES AVENUE,
LOS GATOS, CA 95030

REVISIONS

NO.	ITEM	DATE
1	RESPONSE TO FIRST REVIEW COMMENTS	07/17/20

PERMIT #:

SUBMITTAL:
CITY SUBMITTAL SET

DRAWN BY:

CHECKED BY:

JOB NO: 1826
DATE: 12/04/19

SHEET NO.
P6.2

6/16/2020 1:17 PM

GENERAL ELECTRICAL NOTES

#	DESCRIPTION
1	GENERAL CONTRACTOR SHALL VERIFY FIELD CONDITIONS BEFORE SUBMITTING BID.
2	ALL WORK SHALL BE DONE IN ACCORDANCE WITH 2014 NEC, AS AMENDED BY 2016 CALIFORNIA ELECTRICAL CODE, 2016 CALIFORNIA ENERGY CODE AND ANY ADDITIONAL STATE OR LOCAL CODES WHICH MAY APPLY.
3	GENERAL CONTRACTOR SHALL OBTAIN AND PAY FOR ALL PERMITS, CERTIFICATES, ETC. REQUIRED.
4	GENERAL CONTRACTOR SHALL OBTAIN AND PAY FOR BOTH ROUGH AND FINAL UNDER-WRITERS OR OTHER APPROVED INSPECTION AGENCY CERTIFICATES "ELECTRICAL INSPECTION". THESE CERTIFICATES SHALL BE PRESENTED WITH REQUEST FOR FINAL PAYMENT.
5	IT IS THE INTENT OF THESE PLANS TO PROVIDE A COMPLETE OPERATING ELECTRICAL SYSTEM. THIS CONTRACTOR SHALL FURNISH AND INSTALL ALL WIRING, EQUIPMENT, MATERIAL. ETC. REQUIRED, EXCEPT WHERE SPECIFICALLY NOTED AS BEING FURNISHED BY OTHERS. SHOULD THERE BE ANY QUESTIONS CONCERNING RESPONSIBILITY, THEY SHALL BE ADDRESSED TO ARCHITECT PRIOR TO BID. NO EXTRA CHARGES WILL BE ALLOWED.
6	ELECTRICAL SERVICE SHALL BE COORDINATED WITH THE EXISTING FIELD CONDITIONS.
7	CONTRACTOR SHALL MAKE ALL FINAL CONNECTIONS TO ALL CONTROLS, OWNER-SUPPLIED EQUIPMENT, MECHANICAL AND PLUMBING EQUIPMENT AS REQUIRED.
8	REFER TO ARCHITECTURAL DRAWINGS FOR ELEVATION DETAILS. ALL FIXTURE AND DEVICE LOCATIONS SHOWN ON ARCHITECTURAL DRAWINGS SUPERSEDE THOSE SHOWN ON ELECTRICAL PLANS.
9	CIRCUIT NUMBER ON THE DRAWINGS ARE FOR IDENTIFICATION ONLY AND DO NOT INDICATE THE POSITION ON THE PANEL BOARD. CONNECT THE CIRCUITS WITH THE LIGHTEST LOADS AND THE RECEPTACLE CIRCUITS NEAR THE TOP OF THE PANEL, AND THE MORE HEAVILY LOADED CIRCUITS NEAR THE BOTTOM. BALANCE ALL CIRCUITS EVENLY BETWEEN PHASE SO THAT FEEDER WIRES CARRY APPROXIMATELY EQUAL CURRENT. ALL PHASES MUST BE BALANCED WITHIN 10% OR LESS. G.C. SHALL REBALANCE IF NECESSARY.
10	BRANCH CIRCUIT CONDUCTOR INSULATION SHALL BE COLOR CODED AND SHALL BE 600 VOLT. TYPE THHN/THWN.
11	CABLES IN HIGH TEMPERATURE AREAS SHALL HAVE INSULATION TYPE SUITABLE FOR THE TEMPERATURE. CABLES USED IN SPACES FOR ENVIRONMENTAL AIR SHALL CONFORM WITH APPLICABLE N.E.C REQUIREMENTS.
12	ALL WIRING USED IN RETURN OR DISCHARGE AIR PLENUMS SHALL BE PLENUM RATED OR INSTALLED PER METHODS APPROVED BY THE LATEST EDITION OF THE N.E.C. FOR SUCH APPLICATION.
13	ALL WIRE AND CABLE CONDUCTORS SHALL BE COPPER WITH INSULATION RATED 600V. CONDUCTORS SIZED #10 AWG AND SMALLER SHALL BE SOLID OD STRANDED, AND CONDUCTORS SIZED LARGER THAN #10 AWG SHALL BE STRANDED WIRE.
14	BRANCH CIRCUITS FOR POWER AND LIGHTING SHALL NOT BE LESS THAN #12 AWG. OR AS NOTED. WIRES ARE TO BE SIZED FOR THE APPROPRIATE VOLTAGE DROPS. SEE WIRE SIZE SCHEDULE ON THIS SHEET.
15	ALL DATA CABLES SHALL BE CAT6, PLENUM RATED. TO BE PROVIDED BY OWNER SELECTED VENDOR. ELECTRICAL WORK SHALL BE TO PROVIDE OUTLET BOXES AND "RING AND STRING" FOR PULLING OF CABLES IN CONCEALED SPACES.
16	CONTROL WIRING SHALL NOT BE LESS THAN #14 AWG UNLESS OTHERWISE NOTED.
17	HOMERUNS SHOWN ARE SCHEMATIC. CONTRACTOR MAY ORIGINATE HOMERUNS FROM DIFFERENT LOCATIONS. ALL WIRE INCLUDING HOMERUNS SHALL BE DELINEATED ON AS-BUILT DRAWINGS.
18	ALL WIRING INSTALLED UNDER THIS CONTRACT SHALL BE TESTED FOR PROPER CONNECTIONS AND SHORT CIRCUITS PRIOR TO THE TURNING OVER OF WORK AS A COMPLETE UNIT.
19	PROVIDE ALL ELECTRICAL SYSTEM GROUNDING IN ACCORDANCE WITH N.E.C. REQUIREMENTS EVEN IF IT IS NOT SHOWN ON THE DRAWINGS. INCLUDE ADDITIONAL GROUNDING CONDUCTORS IN ALL RACEWAYS EVEN THOUGH THE DRAWINGS SHOW ONLY CIRCUIT AND/OR NEUTRALS CONDUCTORS. THE PLUMBING AND PIPING SYSTEM SHALL NOT BE USED AS A GROUND. ALL TRANSFORMER NEUTRALS SHALL BE GROUNDED TO BUILDING STEEL IN ACCORDANCE WITH NEC 250-70.
20	ALL CONDUITS PASSING THROUGH PARTITIONS ARE TO BE APPROPRIATELY SLEEVED AND SEALED.
21	FURNISH AND INSTALL ALL CONDUIT WITH PULL WIRES AS REQUIRED. ALL OUTLET BOXES SHALL BE STEEL, EXTRA DEEP WITH GROUNDING PIGTAILS. GROUNDING PUSH-CLIPS ARE NOT ACCEPTABLE.
22	ALL PENETRATIONS SHALL BE INSTALLED AND SEALED PER NATIONAL STATE AND LOCAL CODES
23	DO NOT MAKE ANY CHANGES OR SUBSTITUTIONS WITHOUT SPECIFIC WRITTEN APPROVAL FROM THE ARCHITECT OR ENGINEER.
24	GUARANTEE ALL WORK, MATERIAL AND EQUIPMENT FOR A PERIOD OF ONE YEAR FROM THE DATE OF APPROVAL AND FINAL ACCEPTANCE.
25	THIS DESIGN IS BASED ON INITIAL DESIGN DATA. GENERAL CONTRACTOR TO SUPPLY AND INSTALL FEEDERS, FUSES AND CIRCUIT BREAKERS TO MATCH THE NAMEPLATE RATING OF ALL EQUIPMENT. THIS SHALL BE INCLUDED IN THE INITIAL BID PROPOSAL AND NO EXTRAS SHALL BE ENTERTAINED.
26	LABEL ALL JUNCTION BOXES, OUTLETS, LIGHT SWITCH, ETC. WITH CIRCUIT NUMBER ON INTERIOR ON COVER PLATE. USE SELF-ADHESIVE "DYMO" LABEL 1/8" HIGH LETTERS.
27	GENERAL CONTRACTOR SHALL PROVIDE SEISMIC RESTRAINTS AND SUPPORTS FOR ALL FLOOR, WALL, AND CEILING MOUNTED ELECTRICAL EQUIPMENT TO RESIST EARTHQUAKE EFFECTS DETERMINED IN ACCORDANCE WITH THE BUILDING CODE.
28	THE G.C. SHALL PROVIDE ALL EQUIPMENT. MATERIALS AND LABOR TO COMPLETE ALL ELECTRICAL WORK IN A NEAT AND WORKMANLIKE MANNER AND IN ACCORDANCE WITH GOOD COMMERCIAL PRACTICE INCLUDING THE INSTALLATION OF ALL THE EQUIPMENT MATERIALS AND SYSTEMS AND THE FINAL CONNECTIONS TO THE OWNER'S EQUIPMENT AND FIXTURES AS REQUIRED BY THE OWNER. THE G.C. SHALL ALSO FURNISH TEMPORARY WIRING AND LIGHTING T0 PROVIDE A MINIMUM OF 25 FC IN WORK AREAS FOR USE OF ALL THE TRADES DURING CONSTRUCTION AND THE INSTALLATION OF THE OWNERS FIXTURES. THE G.C. IS RESPONSIBLE TO REMOVE ALL TEMPORARY WIRING UPON COMPLETION OF CONSTRUCTION OF ALL TRADES.
29	THIS CONTRACTOR SHALL BE RESPONSIBLE TO PROVIDE AND INSTALL ALL SUPPLEMENTARY SUPPORT, INCLUDING SUPPORT STEEL AS REQUIRED TO HANG ALL EQUIPMENT AND LIGHTING FROM THE EXISTING STRUCTURE IN ACCORDANCE WITH THE ARCHITECTURAL/STRUCTURAL SUPPORT AND LOADING CRITERIA.
30	IT IS THE RESPONSIBILITY OF THIS CONTRACTOR TO PROVIDE FULLY DIMENSIONED COORDINATION DRAWINGS FOR ALL OF HIS RESPECTIVE WORK. THESE DRAWINGS MUST BE FULLY COORDINATED WITH ALL EXISTING CONDITIONS. ALL HVAC, PLUMBING, FIRE PROTECTION, ELECTRICAL, LIGHTING, STRUCTURAL AND ARCHITECTURAL SYSTEMS PRIOR TO PREPARING COMPOSITE MULTI DISCIPLINE COORDINATION DRAWINGS.
31	ALL DISCONNECTING MEANS AND EQUIPMENT INDICATED ON THE DRAWING SHALL BE IDENTIFIED BY NAMEPLATE IN COMPLIANCE WITH THE NATIONAL ELECTRICAL CODE 110-22.
32	ALL WIRING FOR THE EMERGENCY LIGHTING AND EMERGENCY SYSTEMS SHALL BE INSTALLED IN ACCORDANCE WITH THE REQUIREMENTS OF THE NATIONAL ELECTRIC CODE ARTICLE 700.
33	THE WIRING METHODS AND MATERIALS INDICATED IN THE SPECIFICATIONS AND ON THE DRAWINGS SHALL BE INSTALLED AND CONNECTED IN ACCORDANCE WITH THE REQUIREMENTS OF THE NATIONAL ELECTRIC CODE ARTICLE 300.
34	THE ELECTRICAL SERVICE AND DISTRIBUTION SYSTEM AS INDICATED ON THE RISER DIAGRAM AND MATERIALS INDICATED IN THE SPECIFICATIONS SHALL BE IN COMPLIANCE WITH THE REQUIREMENTS OF THE NATIONAL ELECTRIC CODE ARTICLE 230, SERVICES.
35	ALL OVER CURRENT PROTECTION SHALL BE IN COMPLIANCE WITH THE NATIONAL ELECTRIC CODE SECTION 240, OVERCURRENT PROTECTION.
36	ALL GROUNDING REQUIREMENTS OF THE COMPLETE ELECTRICAL DISTRIBUTION SYSTEM AND AS INDICATED IN THE SPECIFICATIONS SHALL BE IN ACCORDANCE WITH THE NATIONAL ELECTRIC CODE ARTICLE 250, GROUNDING AND BONDING.
37	PRIOR TO ANY REQUIRED CUTTING AND PATCHING OF CONCRETE FLOOR AND/OR CUTTING OF ROOF, CONTRACTOR SHALL COORDINATE WITH BUILDING ENGINEER.
38	FOR ALL LIGHTING FIXTURES MOUNTED IN HUNG CEILING THE GENERAL CONTRACTOR SHALL PROVIDE AND INSTALL INDIVIDUAL SUPPORT AT EACH CORNER OF RECESSED LIGHTING TROFFER CONNECTED TO BUILDING STEEL ABOVE ALL CONDUIT AND MC CABLE MOUNTED ABOVE HUNG CEILING SHALL BE INDIVIDUALLY SUPPORTED IN THE SAME FASHION AS PER NEC REQUIREMENTS.
39	DO NOT SCALE FROM THESE DRAWINGS.
40	PLANS ARE PREPARED WITH REQUIRED BRANCH CIRCUITS INDICATED BY CIRCUITS NUMBERS. PROVIDE AND INSTALL ALL CONDUITS. CONDUCTORS, BOXES, MISCELLANEOUS FITTINGS, ETC. FOR A COMPLETE AND OPERABLE SYSTEM (HOME RUN SHOWN). BRANCH CIRCUIT INSTALLATION SHALL COMPLY WITH SPECIFICATIONS AND N.E.C.
41	ELECTRICAL RECEPTACLE, SWITCH AND CONTROL HEIGHTS (CBC-1136A.1:). RECEPTACLE HEIGHTS: ELECTRICAL RECEPTACLE OUTLETS ON BRANCH CIRCUITS OF 30 AMPERES OR LESS AND COMMUNICATION SYSTEM RECEPTACLES SHALL BE LOCATED NO MORE THAN 48 INCHES (1219 MM) MEASURED FROM THE TOP OF THE RECEPTACLE OUTLET BOX OR RECEPTACLE HOUSING NOR LESS THAN 15 INCHES (381 MM) MEASURED FROM THE BOTTOM OF THE RECEPTACLE OUTLET BOX OR RECEPTACLE HOUSING TO THE LEVEL OF FINISHED FLOOR OR WORKING FLATFORM. IF THE REACH IS OVEN AN OBSTRUCTION (FOR EXAMPLE, A KITCHEN BASE CABINET) BETWEEN 20 AND 25 INCHES (508 AND 635 MM) IN DEPTH, THE MAXIMUM HEIGHT MEASURED AT THE BOX IS REDUCED TO 44 INCHES (1118MM) FOR FORWARD APPROACH, OR 46 INCHES (1168 MM) FOR SIDE APPROACH, PROVIDED THE OBSTRUCTION IS NO MORE THAN 24 INCHES (610 MM) IN DEPTH. OBSTRUCTION SHALL NOT EXCEED MORE THAN 25 INCHES (635 MM) FROM THE WALL BENEATH THE RECEPTACLE.
42	SWITCH AND CONTROL HEIGHTS: (CBC 1136A.2:) CONTROL OR SWITCHES INTENDED TO BE USED BY THE OCCUPANT OF THE ROOM OR AREA TO CONTROL LIGHTING AND RECEPTACLE OUTLETS, APPLIANCES, ALARMS OR COOLING, HEATING AND VENTILATING EQUIPMENT SHALL BE LOCATED NO MORE THAN 48 INCHES (1219 MM) MEASURED FROM THE TOP OF THE OUTLET BOX NOR LESS THAN 15 INCHES (381 MM) MEASURED FROM THE BOTTOM OF THE OUTLET BOX TO THE LEVEL OF THE FINISHED FLOOR OR WORKING PLATFORM. IF THE REACH IS OVER A PHYSICAL BARRIER OR AN OBSTRUCTION (FOR EXAMPLE , A KITCHEN BASE CABINET) BETWEEN 20 AND 25 INCHES (508 AND 635MM) IN DEPTH, THE MAXIMUM HEIGHT IS REDUCED TO 44 INCHES (1118 MM) FOR FORWARD APPROACH, OR 46 INCHES (1168 MM) FOR SIDE APPROACH, PROVIDED THE OBSTRUCTION IS NO MORE THAN 24 INCHES (610 MM) IN DEPTH. PHYSICAL BARRIERS OR OBSTRUCTIONS SHALL NOT EXTEND MORE THAN 25 INCHES (635 MM) FROM THE WALL BENEATH A CONTROL.

ELECTRICAL LEGEND

SYMBOL	DESCRIPTION
$	SINGLE POLE SWITCH AND BOX, WALL MOUNTED +44" AFF. LOWER CASE LETTER INDICATES CIRCUIT CONTROLLED BY SWITCH.
D	WALL MOUNTED DIMMER SWITCH, 0-10V DIMMING WITH ON-OFF SWITCH.
$LV	WALL MOUNTED 2 WAY ON, CENTER OFF LOW VOLTAGE SWITCH FOR LCP CONTROLLER LIGHTS.
	RECEPTACLE, DUPLEX 20A, 120V GRD, NEMA 5-20R +18"AFF U.O.N. (WP=WEATHERPROOF, GFI=GROUND FAULT CIRCUIT INTERRUPTER)
D	DEDICATE RECEPTACLE, DUPLEX 20A, 120V GRD, NEMA 5-20R +18"AFF U.O.N. (WP=WEATHERPROOF, GFI=GROUND FAULT CIRCUIT INTERRUPTER)
USB	USB RECEPTACLE, DUPLEX 20A, 120V GRD, NEMA 5-20R +42"AFF U.O.N.
	RECEPTACLE, SINGLE, 20A, 120V GRD, NEMA 5-20R +18"AFF UON.
	RECEPTACLE, DOUBLE DUPLEX (2) 20A, 120V, GRD - NEMA (2) 5-20R +18"AFF U.O.N.
	RECEPTACLE DUPLEX 20A, 120V GRD NEMA 5-20R FLOOR MOUNTED.
	RECEPTACLE DOUBLE DUPLEX (2) 20A, 120V GRD, NEMA 5-20R UON. FLOOR MOUNTED.
	2 PORT VOICE/ DATA OUTLET, WALL MOUNT +18" AFF PROVIDE RING & STRING TO PULL CABLES THRU HOLLOW WALL. VOICE/ DATA WIRING BY TELECOM SYSTEM INSTALLER.
TV	TV OUTLET, WALL MOUNT +60" AFF PROVIDE RING & STRING TO PULL CABLES THRU HOLLOW WALL.
	COMBINATION 4-PLEX RECEPTACLE, NEMA 5-20R DOUBLE DUPLEX (1 DUPLEX AUTO CONTROLLED BY OCCUPANCY SENSOR PER T24, (1) DUPLEX UNCONTROLLED), & TYPE 6 VOICE/DATA OUTLET, FLOOR MOUNTED. PROVIDE MIN. 3/4" TEL/DATA CONDUIT WITH PULL WIRES.
	4-PLEX RECEPTACLE, NEMA 5-20R DOUBLE DUPLEX (1 DUPLEX AUTO CONTROLLED BY OCCUPANCY SENSOR PER T24, (1) DUPLEX UNCONTROLLED), +18"AFF, U.O.N. SEE NOTE 2.
	DUPLEX RECEPTACLE, NEMA 5-20R OCCUPANCY SENSOR CONTROLLED, +18"AFF. SEE NOTE 2.
GFCI	GFCI DUPLEX RECEPTACLE ABOVE COUNTER LEVEL, NEMA 5-20R.
GFCI	GFCI DUPLEX RECEPTACLE ABOVE COUNTER LEVEL, VACANCY SENSOR CONTROLLED, NEMA 5-20R.
	NEMA L6-30R RECEPTACLE AT LAB ROOM/SERVER ROOM, FIELD COORDINATE FINAL MOUNTING LOCATION & HEIGHT.
30	RECEPTACLE AT SERVER ROOM, NEMA L15-30. MOUNTED ABOVE RACKS.
	RECEPTACLE, 120V/208V, 3PH, 4W, GRD, RATING AS INDICATED IN PLANS.
	RECEPTACLE 20A, 480V, 3PH, 4W, GRD, NEMA L22-20R, +18"AFF UON.
	DUPLEX RECEPTACLE AT TEST LAB 20A, 120V, GND (5-20R U.O.N), SUSPENDED BY TYPE S.O. CORD WITH GRIPS AT EACH END.
	DOUBLE DUPLEX RECEPTACLE AT TEST LAB 20A, 120V, GND (5-20R U.O.N), SUSPENDED BY TYPE S.O. CORD WITH GRIPS AT EACH END.
	TWIST-LOCK RECEPTACLE 20, 250V, SINGLE PHASE (L6-20R U.O.N), SUSPENDED BY TYPE S.O. CORD WITH GRIPS AT EACH END.
OS	OCCUPANCY SENSOR LOW VOLTAGE CEILING MOUNTED FOR ROOM CONTROLLER.
OS	OCCUPANCY SENSOR LOW VOLTAGE WALL MOUNTED FOR ROOM CONTROLLER.
DS	CEILING MOUNTED DAYLIGHT SENSOR.
J	JUNCTION BOX CEILING MOUNTED, SIZE TO CODE, TAPE AND TAG WIRES.
J	JUNCTION BOX WALL MOUNTED, SIZE TO CODE, TAPE AND TAG WIRES.
	NEW ELECTRICAL PANELBOARD, SURFACE OR FLUSH MOUNTED.
	EXISTING ELECTRICAL PANELBOARD, SURFACE OR FLUSH MOUNTED.
	SPECIAL PURPOSE ELECTRICAL PANELBOARD, SURFACE OR FLUSH MOUNTED.
	TRANSFORMER - DRY TYPE.
	FUSED DISCONNECT SWITCH WITH DUAL ELEMENT FUSES. SWITCH AND FUSES RATING PER NAMEPLATE OF SERVED UNIT.
	NON-FUSED DISCONNECT SWITCH, RATING PER NAMEPLATE OF SERVED UNIT.
	MAGNETIC MOTOR STARTER, NEMA RATING AS REQUIRED PER SERVED UNIT.
M	WALL MOUNTED FURNITURE FEEDS W/POWER & TELE/DATA PORT CAPACITY FOR ELECTRIFIED DESKS PER CLIENT'S REQUIREMENTS.
P	WALL MOUNTED JUNCTION BOX FOR PRE-WIRED FURNITURE POWER SYSTEM CONNECTION. PROVIDE POWER WHIP WITH TERMINATION PLUG TO MATCH FURNITURE SYSTEM CONNECTOR. LOCATE BOX AS LOW AS POSSIBLE. FIELD COORDINATE FINAL LOCATION.
C	COMBINATION TELEPHONE AND DATA OUTLET, WALL MOUNTED AS LOW AS POSSIBLE FOR FLEXIBLE CONNECTION TO FURNITURE SYSTEM.
C P	FLOOR MOUNTED FURNITURE FEEDS W/POWER & TELE/DATA PORT CAPACITY FOR ELECTRIFIED DESKS PER CLIENT'S REQUIREMENTS.
C P	POWER POLES W/POWER & TELE/DATA PORT CAPACITY FOR ELECTRIFIED DESKS PER CLIENT'S REQUIREMENTS.
	LEGEND NOTES: 1. MOUNTING HEIGHT INDICATED ARE AFF TO CENTER OF PLATE. INCASE OF CONFLICT, GENERAL NOTES 41 & 42 SHALL PREVAIL. 2. NOT ALL SYMBOLS AND ABBREVIATIONS ARE NECESSARILY USED IN THIS PROJECT.

LIGHTING CONTROL DIAGRAM

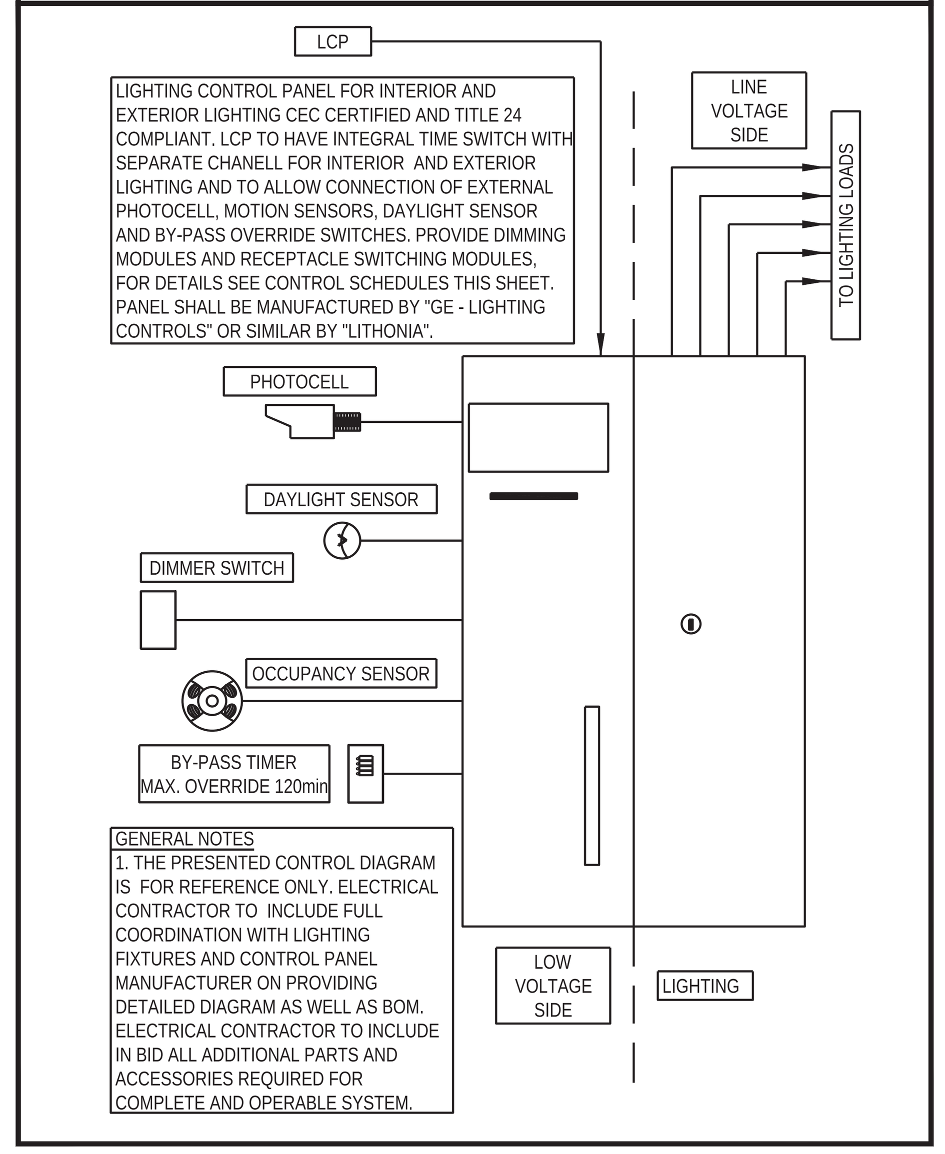

WIRE SCHEDULE AND NOTES

LOAD PER PH (KVA)	WIRE SIZE (AWG)	MAXIMUM LENGTH OF BRANCH CIRCUIT PER UTILIZATION VOLTAGE			NOTES AND REMARKS
		(120, 1PH, MAX V.D. 3%)	(208, 1PH, MAX V.D. 3%)	(208, 3PH, MAX V.D. 3%)	
< 1.92	#12	56 FT	85 FT	98 FT	5
	#10	94 FT	141 FT	163 FT	5
	#8	144 FT	217 FT	250 FT	5
	#6	230 FT	345 FT	398 FT	5
< 1.44	#12	75 FT	113 FT	130 FT	5
	#10	125 FT	188 FT	217 FT	5
	#8	192 FT	289 FT	334 FT	5
	#6	306 FT	460 FT	531 FT	5
< 1.26	#12	86 FT	129 FT	149 FT	
	#10	143 FT	215 FT	248 FT	
	#8	220 FT	330 FT	381 FT	
< 1.08	#12	100 FT	150 FT	173 FT	
	#10	167 FT	250 FT	289 FT	
	#8	256 FT	385 FT	445 FT	
< 0.9	#12	120 FT	180 FT	208 FT	
	#10	200 FT	300 FT	347 FT	
<0.72	#12	150 FT	225 FT	260 FT	
	#10	250 FT	376 FT	434 FT	

#	NOTES
1	CONTRACTOR SHALL REFER TO THIS TABLE PRIOR TO START OF BRANCH CIRCUIT ROUGH-IN.
2	CONTRACTOR SHALL USE THE APPROPRIATE WIRE SIZE IN CONJUNCTION WITH THE LENGTH OF THE PROPOSED FIELD VERIFIED ROUTING OF BRANCH CIRCUIT WIRING (INCLUDING VERTICAL & LATERAL RUN, ROUTED PARALLEL/PERPENDICULAR TO THE BUILDING STRUCTURE).
3	SEE PANEL SCHEDULE FOR THE CORRESPONDING KVA LOAD PER PHASE OF A PARTICULAR BRANCH CIRCUIT.
4	RESISTANCE VALUES USED ARE FOR UNCOATED COPPER WIRES IN STEEL CONDUIT. 75 DEGREE C., OPERATING AT 60HZ.
5	THE VALUES IN "120V, 1PH" COLUMN IS TO BE USED FOR GENERAL PURPOSE RECEPTACLE LOADS.

ABBREVIATIONS AND TAGS

ABB.	DESCRIPTION	ABB.	DESCRIPTION
EWH	ELECTRIC WATER HEATER	SD	SMOKE DETECTOR
(E)	EXISTING TO REMAIN	TEL	TELEPHONE
EC	ELECTRICAL CONTRACTOR	TX	TRANSFORMER
FA	FIRE ALARM	TV	TELEVISION
FMT	FLEXIBLE METALLIC TUBING	UAC	UNDER ANOTHER CONTRACT
GC	GENERAL CONTRACTOR	UAS	UNDER ANOTHER SECTION
GFI	GROUND FAULT INTERUPTER	UON	UNLESS OTHERWISE NOTED
IG	ISOLATED GROUND	V.D.	VOLTAGE DROP
LL	LANDLORD	W	WIRE
LV	LOW VOLTAGE	WP	WEATHERPROOF
AC 1	MECHANICAL UNIT TAG. SEE MECHANICAL DRAWINGS FOR ADDITIONAL DESCRIPTION.	E-4 4	DETAIL TAG. REFER TO DETAIL 4 ON SHEET NUMBER E-4.

LIGHTING FIXTURE SCHEDULE

Type	Symbol	Type / Location / Description	Manufacturer / Catalog #	Lamps	Watts	Voltage	Notes
A		Recessed mounted 2'W X 4'L lighting fixture at lobby, hallways, offices, conference rooms, traffic, restrooms.	TBD	LED	38W	120V	New lighting fixture
AE		Same as type "A" except with battery pack	TBD	LED	38W	120V	New EM lighting fixture
B		Surface mounted 4'L linear lighting fixture at storage.	TBD	LED	30W	120V	New lighting fixture
C		Suspended mounted 12'L linear lighting fixture at new steel building storage.	TBD	LED	120W (10W/FT)	120V	New lighting fixture
CE		Same as type "C" except with battery pack	TBD	LED	120W (10W/FT)	120V	New EM lighting fixture
D		Outdoor wall mounted lighting fixture above roll-up door and exterior walls at new steel building storage.	Lithonia Lighting TWR2 LED ALO 40K MVOLT PE DDBTXD	LED	21W	120V	New lighting fixture
EX		Wall or ceiling mounted emergency exit sign	TBD	LED	3W	120V	New EM sign lighting fixture
EM		Twin head emergency lighting fixt. with battery pack and charger	TBD	LED	6W	120V	New EM lighting fixture

All emergency and exit lights shall be provided with a minimum 90 minutes rated capacity of emergency battery under full load as per CBC 1008.3.4. (1)

ELECTRICAL DRAWING SCHEDULE

#	TITLE
E0.1	LEGEND, NOTES, DIAGRAM & ABBREVIATIONS
E0.2	ELECTRICAL SPECIFICATIONS
E0.3A	PARTIAL SINGLE LINE DIAGRAM & PANEL SCHEDULES
E0.3B	PANEL SCHEDULES
E0.4A	TITLE 24 FORMS - INDOOR LIGHTING - PART 1 (ENGINEERING BUILDING REMODELING)
E0.4B	TITLE 24 FORMS - INDOOR LIGHTING - PART 2 (ENGINEERING BUILDING REMODELING)
E0.4C	TITLE 24 FORMS - INDOOR LIGHTING - PART 3 (ENGINEERING BUILDING REMODELING)
~~E0.5A~~	~~TITLE 24 FORMS - INDOOR LIGHTING - PART 1 (NEW STEEL BUILDING)~~
~~E0.5B~~	~~TITLE 24 FORMS - INDOOR LIGHTING - PART 2 (NEW STEEL BUILDING)~~
~~E0.5C~~	~~TITLE 24 FORMS - INDOOR LIGHTING - PART 3 (NEW STEEL BUILDING)~~
E0.6A	TITLE 24 FORMS - OUTDOOR LIGHTING - PART 1
E0.6B	TITLE 24 FORMS - OUTDOOR LIGHTING - PART 2
E0.6C	TITLE 24 FORMS - OUTDOOR LIGHTING - PART 3
E0.7A	TITLE 24 FORMS - SOLAR READY ZONES, PART 1
E0.7B	TITLE 24 FORMS - SOLAR READY ZONES, PART 2
E1.0	OVERALL SITE PLAN - ELECTRICAL
E2.1	CEILING RCP PLAN - LIGHTING (ENGINEERING BUILDING REMODELING)
~~E2.2~~	~~CEILING RCP PLAN - LIGHTING (NEW STEEL BUILDING)~~
E3.1	FLOOR PLAN - POWER (ENGINEERING BUILDING REMODELING)
~~E3.2~~	~~FLOOR PLAN - POWER (NEW STEEL BUILDING)~~
E4.1	ROOF FLOOR PLAN - ELECTRICAL (ENGINEERING BUILDING REMODELING)
~~E4.2~~	~~ROOF FLOOR PLAN - ELECTRICAL (NEW STEEL BUILDING)~~
E5.1	CEILING RCP PLAN - PHOTOMETRICS (ENGINEERING BUILDING REMODELING)
E5.2	CEILING RCP PLAN - PHOTOMETRICS, EGRESS PATH (ENGINEERING BUILDING REMODELING)
~~E5.3~~	~~CEILING RCP PLAN - PHOTOMETRICS (NEW STEEL BUILDING)~~
~~E5.4~~	~~CEILING RCP PLAN - PHOTOMETRICS, EGRESS PATH (NEW STEEL BUILDING)~~

Cuschieri Horton Architects
1475 S. Bascom Ave, Suite 204
Campbell, California 95008
408.371.8200 Fx 408.371.8201

ACIES ENGINEERING
3371 Olcott Street
Santa Clara, CA 95054
ph: (408) 522-5255
fx: (408) 522-5260
info@acies.net

Copyright © 2019

REGISTERED PROFESSIONAL ENGINEER TOMISLAV Z. GAJIC No.E15130 Exp.06/30/20 ELECTRICAL STATE OF CALIFORNIA

LEGEND, NOTES, DIAGRAM & ABBREVIATIONS

TOWN OF LOS GATOS
ENGINEERING BUILDING TI ~~AND STORAGE BUILDING~~
41 MILES AVENUE,
LOS GATOS, CA 95030

REVISIONS

NO.	ITEM	DATE
1	RESPONSE TO FIRST REVIEW COMMENTS	6/4/20

PERMIT #:

SUBMITTAL:
CITY SUBMITTAL SET
DRAWN BY:
CHECKED BY:
JOB NO: 1826
DATE: 12/04/19

SHEET NO.
E0.1

7/23/2020 2:32 PM

ELECTRICAL SPECIFICATIONS

PART 1 — GENERAL

1.01 SCOPE OF WORK:
Furnish and Install all materials and equipment and provide all labor, tools, transportation, superintendence and services required and necessary to complete the work shown on the drawings and/or specified herein.
Also include all other work and miscellaneous items, not specifically mentioned, but reasonably inferred for a complete installation including all accessories and appurtenances required for testing the system. It is the intent of the drawings and specifications that all systems be complete, and ready for operation.

1.02 REGULATORY REQUIREMENTS:
Code compliance is mandatory. Nothing in these Drawings and Specification spermits work not conforming to these codes. Where work is shown to exceed minimum code requirements, comply with drawings and specifications. All work and materials shall comply with the latest rules, codes and regulations, including, but not limited to the following:
1. Occupational Safety and Health Act Standards (OSHA).
2. NFPA #70: National Electric Code (NEC), California Electrical Code (CEC).
3. NFPA #101: Life Safety Code.
4. State Fire Marshal.
5. Local Utilities Companies.

1.03 LICENSE, FEES AND PERMITS:
Electrical contractor shall pay for all licenses, permits and inspection fees required by the authority having jurisdiction and shall arrange for all required inspections.

1.04 SAFETY AND INDEMNITY:
The Contractor shall be solely and completely responsible for conditions of the job site, including safety of all persons and property during performance of work. This requirement will apply continuously and not be limited to normal working hours. No act, service, drawing review or construction review by the Owner, the Engineers or their Consultants, is intended to include review of the adequacy of the Contractor's safety measures, in, on, or near the construction site.

1.05 DRAWINGS AND SPECIFICATIONS:
All drawings and all Divisions of these specifications shall be considered as a whole and work of this Division shown anywhere therein shall be furnished under this Division. Drawings are diagrammatic and indicate the general arrangement of equipment and wiring. Most direct routing of conduits and wiring is not assured. Exact requirements shall be governed by conditions of the job. Consult all other drawings in preparation of the bid.
Extra lengths of wiring or addition of pull or junction boxes, etc., necessitate by such conditions shall be included in the bid.

1.06 CONDITIONS AT SITE:
The electrical contractor shall have examined the site and familiarized themselves with all discernible existing conditions. No extra payment will be allowed for work required because of these conditions, whether specifically mentioned or not.

1.07 WORKMANSHIP AND CONTRACTOR'S QUALIFICATIONS:
Only quality workmanship will be accepted. Haphazard or poor installation will be cause for rejection of work.

1.08 SHOP DRAWINGS AND MATERIALS LISTS:
Submit to Owner in a single package six (6) copies of complete shop drawings and materials list, as noted below, for review within fifteen (15) days after award of contract.
Submittals required as follows:
1. Wiring devices: switches, receptacles, device plates.
2. Enclosures for utility company metering.
3. Main fused disconnect switch.
4. Panelboards.
5. Disconnect switches.
6. Lighting fixtures, lamps and lighting control equipment.

1.09 SUBSTITUTIONS:
One or more makes of materials or methods may have been specified to establish the standard of quality, workmanship, finish and design required, but other materials or methods equal in quality, workmanship, finish, design, and guaranteed performance, will be accepted. However, all changes and substitutions shall be requested in letter form and shall be accompanied with a statement of the amount of money to be returned to the contract if the substitution is permitted.
No work involving materials submitted for substitution shall proceed until written acceptance is received from the Owner. The Owner is the sole judge of acceptability of preferred substitutions. If a substitution item is permitted, and any re-design effort is thereby necessitated, the required redesign shall be at the Contractor's expense.

1.10 COORDINATION:
Coordinate work with other trades to avoid conflict and to provide correct rough-in and connection for equipment furnished under other trades that require electrical connections. Inform Contractors of other trades of the required access to and clearances around electrical equipment to maintain service ability and code compliance.
Verify equipment dimensions and requirements with provisions specified under this Section. Check actual job conditions before fabricating work. Report necessary changes in time to prevent needless work. Changes or additions, subject to additional compensation which are made without written authorization and an agreed price, shall be at the Contractor's risk and expense.

1.11 CUTTING AND PATCHING:
All cutting and patching required for work of this Division is included herein. Coordination with General Contractor and other trades is imperative. Contractor shall bear the responsibility for and the added expense of adjusting for improper holes, supports, etc.

1.12 ACCEPTANCE DEMONSTRATION:
Upon completion of the work, at a time to be designated by the Owner, the Contractor shall demonstrate for the Owner the operation of the electrical installation, including any and all special items installed by him or installed under his supervision. Properly set automatic time switches to perform switching operations in accordance with schedules provided by the Owner's representative, and demonstrate (using the manufacturer's operating instructions) how to override and/or test time switches programming.

1.13 RECORD DRAWINGS, EQUIPMENT DATA:
Maintain one set of clean working drawings at the job site and enter daily such "as-built" information as feeder and service routes, pull box locations and changes in layout or arrangement which occur during construction.
Deliver completed drawings to the Owner.
Deliver to the Owner's representative three copies of data sheets or other current manufacturers' publications for each item of electrical equipment furnished for the project including at least these data:
1. Technical description and replaceable parts list.
2. Physical description and installation instructions.
3. Main fused disconnect switch.
4. Manufacturer's Warranty.

1.14 CLEAN-UP:
Rid the premises of scrap materials, trash and debris both during construction and at completion of the project.
Leave the building and surrounding area in a clean and orderly condition.

1.15 GUARANTEE:
Guarantee the installation free from defects of workmanship and materials for a period of one year after Date of Certification of final payment and promptly remedy any defects developing during this period, without charge.

1.16 TEMPORARY SERVICES:
Provide adequate and safe temporary electrical power and lighting throughout the construction and finishing of the premises. In addition to special or unusual requirements, provide at least these items:
1. Three 20-amp circuits for construction power tools. Provide GFI temporary circuits with coverplates to meet OSHA requirements.
2. Three or more light strings suspended approximately one foot below the height of finish ceiling with lamps spaced not more than twelve feet on centers. Strings shall be run the length of the store space parallel to the demising walls, with one string within eight feet of each wall and one (or more) intermediate string(s) arranged to limit the spacing between rows to sixteen feet or less.
3. Flood lighting and task lighting for painting and other finish work. When permanent electrical service is operable, disconnect and remove from the premises the materials and equipment used for temporary power and lighting, and restore modifications and repair damage caused by the installation, use or removal of temporary service provisions.

PART 2 — PRODUCTS

2.01 MATERIAL APPROVAL:
All materials must be new and bear Underwriter's Laboratories label. Materials that are not covered by UL testing standards shall be tested and approved by an independent testing laboratory or a governmental agency.
Material not in accordance with these specifications may be rejected either before or after installation.

2.02 CONDUITS AND OTHER RACEWAYS:
A. Rigid Steel: Hot-dipped galvanized.
B. Intermediate Metal Conduit (IMC): Hot-dipped galvanized.
C. Electrical Metallic Tubing (EMT): Electro-galvanized.
D. Wireway: Code gauge steel, with knockouts and hinged cover, corrosion resistant gray baked enamel finish.
E. Provide fittings and accessories approved for the purpose equal in all respects to the conduit or raceway.
EMT connectors and couplings shall be steel setscrew type indoors and steel compression type in wet locations and outdoors.

2.03 WIRES AND CABLES:
A. For power and lighting system 600V or less:
1. Conductor: minimum size #12 AWG.
Stranded wire required for all wiring above 90 volts.
2. Insulation type:
a. #12 to #1 AWG: THWN for wet or underground and THHN for dry locations.
b. #1/0 through #4/0 AWG: XHHW (55 mils).
c. #250 MCM and larger: XHHW (65 mils).
d. Grounding wire: TW.

B. For signal and communications circuit:
1. Special cables shall be as specified on drawings.
2. Conductors for general use shall be stranded copper conductor, #16 AWG minimum, with THWN insulation for underground or wet locations and THHN insulation for dry locations.
C. Acceptable Products: General Electric, Anaconda, Okonite, Paranite or Triangle products conforming or exceeding applicable IPCEA standards.

2.04 OUTLET BOXES, JUNCTION AND PULL BOXES:
A. Outlet boxes: 4" square x 1-1/2" deep (or larger) galvanized sheet steel KO-type with plaster ring and cover for general interior use and cast metal type FS or FD with matching screw covers for exterior and exposed interior locations (gasketed in damp or wet locations).
B. Junction boxes shall be same as outlet boxes up to 42 cu. in. and codegauge steel in larger sizes with surface or flush-type screw-mounted trim covers, both boxes and covers inhibitor-primed and painted inside out.
C. Pull boxes shall be same as junction boxes unless indicated otherwise on the drawings, with covers.
D. Telephone outlet boxes shall be the type and size required by the serving telephone company but not smaller than 4-11/16" square x 2-1/8" deep with single-gang ring and Sierra #S-754N split plate bushing.

2.05 WIRING DEVICES AND PLATES:
Wiring devices and plates shall be by Pass and Seymour or approved equal.
1. Standard design:
a. Switch and receptacles devices shall be plastic bodies, color per architect.
b. Wall plates shall be metal type 430, stainless steel, color per architect.
c. Isolated ground receptacles shall be white with orange triangle as required per NEC, manufactured by "Leviton" # 5362-IGW or approved equal.

2.06 CONDUIT HANGERS:
For individual conduit runs not directly fastened to the structure, use rod hangers manufactured by Caddy, Unistrut or Powerstrut.
For multiple conduit runs, use Unistrut or Powerstrut trapeze type conduit support designed for maximum deflection not greater than 1/8".

2.07 WIRE CONNECTORS:
For wire sizes #8 AWG and smaller: Insulated pressure type (with live spring) rated 105 degrees C, 600V, for building wiring and 1000V in signs or fixtures. Scotchlok or Ideal. For wire size #6 AWG and larger: T & B or equivalent compression type with 3M #33+ or Plymouth "Slipknot Grey" tape insulation.

2.08 PANELBOARDS:
A. Construction: Cabinets shall be of code gauge, galvanized steel, surface or flush mounted as indicated. Doors shall be of cold-rolled steel with concealed hinges and flush catch and lock. All panels shall be keyed alike. Panels located adjacent to each other shall have identically sized enclosure and trims. Minimum panel width shall be 20". Finish exposed part with one coat of primer and one coat of light grey enamel suitable for overpainting in field if desired.
B. Bus Bars: Provide ground block with full complement of terminals in addition to insulated neutral bus.
Future breaker spaces shall have complete provision including busses and connecting hardware.
C. Manufacturers: Panelboards shall be General Electric Type "AQ" or type "AE" or equivalent products of Westinghouse, Square-D or Siemens-ITE.
D. Circuit Breakers: Shall be quick-make, quick-break, molded case type:
1. 120/240 Volt Panels: Shall be General Electric Type "Q" line, bolt-on type, with minimum symmetrical interrupting capacity as shown.
2. Provide multi-pole units with common trip element.
3. Circuit breakers used on "ON-OFF" control of fluorescent lighting (panelboard switching) shall be Underwriters' Laboratories listed and marked "SWD" to indicate their suitability.
E. Identification: Provide screwed-on (no adhesives) bakelite or photo-etched metallic nameplate identification on outside of each panel showing panel designation, voltage and phase in minimum 1/8" high letters. Each panel shall contain a metal-framed circuit directory inside cover, with plastic protector.
F. Complete shop drawings are required. See Article 1.08.

2.09 INDIVIDUALLY MOUNTED MOTOR CONTROLLERS:
A. For Polyphase Motors: Combination motor circuit protector and magnetic starter, with 3-leg overload protection. Provide two interlock contacts of the interchangeable open-close type. Provide hand-off-automatic selector switch, motor running pilot light and reset button in cover. Circuits 300V and over shall be provided with 120V control transformers.
B. Starters for fractional horsepower 120V motors shall be manual type unless shown otherwise, equipped with built-in overload protection.
C. Acceptable manufacturers: General Electric, Siemens, Square D, Westinghouse, and Allen Bradley.

2.10 LIGHTING:
A. Furnish and install all fixtures complete, including lamps and ballast ready for service.
B. Supports: Proper supports and mounting accessories, such as hangers, stems, yokes, plaster frames, etc. shall be provided as required by the type of ceiling installed. Where swivel canopies or ball aligners are specified, they shall couse fixture to hang plump regardless of ceiling slope.
C. Fixture Designation: Fixture types are designated on drawings. Where only one fixture designation is shown, it applies to all fixtures in that room or area. For exact fixture count and location refer to reflected ceiling plan.
D. Wire 1-lamp and 3-lamp fluorescent fixtures in tandem where required by code.
E. Ballasts: Advance, GE, or Approved high frequency electronic, full light output, energy saving, Class "P", high power factor, ETL certified, sound rating "A" or as indicated on drawings.

2.11 MISCELLANEOUS MATERIALS:
A: Safety Switches:
Heavy duty type, 600V, horsepower rated for motors, fused or non-fused as required. Mount in enclosure with NEMA rating as required for the specific application General Electric, Square D or Westinghouse.

PART 3 — EXECUTION

3.01 GENERAL:
A: Electric system layouts indicated on the drawings are generally diagrammatic and shall be followed as closely as actual construction and work of other trades will permit. Govern exact routing of cable and wiring and the locations of outlets by the structure and equipment served. Take all dimensions from architectural drawings.
B. Consult all other drawings, verify scales and report any dimensional discrepancies or other conflicts with Owner before submitting bid.
C. All home runs to panelboards are indicated as starting from the outlet nearest the panel and continuing in the general direction of that panel. Continue such circuits to the panel as though the routes were completely indicated. Terminate homeruns of signal, alarm, and communication systems in a similar manner.
D. Avoid cutting and boring holes through structure or structural members wherever possible. Obtain prior approval of Owner and conform to all structural requirements when cutting or boring the structure is necessary and permitted.
E. Furnish and install all necessary hardware, hangers, blocking, brackets, bracing, runners, etc. required for equipment specified under this Section.
F. Provide necessary backing required to insure rigid mounting of outlet boxes.

3.02 WIRING METHODS:
A. Install all wiring in raceway or use MC cable. Where approved by all Applicable codes.Conduit shall be rigid steel, IMC or EMT as follows:
1. Above ground: Use rigid steel, IMC or EMT.
a. Wet locations: Rigid steel or IMC only.
b. Locations subject to mechanical injury: Rigid steel or IMC only.
c. Dry locations and not subject to mechanical injury: EMT, IMC or rigid steel conduit.
2. Underground: Use rigid steel.
B. Use flexible conduits in the following applications:
1. Recessed lighting fixtures.
2. Motor connections.
3. At building joints.
At wet locations, flexible conduit shall be liquid tight type.

3.03 INSTALLATION OF CONDUITS:
A. General:
1. Run all conduit concealed unless otherwise noted or shown.
2. Run all conduit parallel to or at right angles to center lines of columns and beams.
3. Conduits above ceilings shall not obstruct removal of ceiling tiles, lighting fixtures, air diffusers, etc.
4. Conduits shall not cross any duct shaft or area designated as future duct shaft horizontally. Conduit risers when allowed in duct shaft must be coordinated with Mechanical work to avoid any conflict.
B. Conduit Supports:
1. Support conduits with Underwriter's Laboratories listed steel conduit supports at intervals required by the National Electric Code. Wires or sheet metal strips are not acceptable for conduit support. Use conduit hangers for all conduits not directly fastened to structure and for all multiple conduit runs. Do not attach any conduit to mechanical ducts or pipes.
2. Individual conduits 1/2" and 3/4" size for lighting may be supported from ceiling support wires with Caddy clips only if acceptable to local code. Only one conduit is permitted to be attached to any ceiling support wire. Hang such conduit so as not to affect level of ceiling.
3. Avoid attaching conduit to fan plenums. When it is necessary to support conduit from fan plenum, provide a length of flexible conduit between portion attached fan plenum and portion attached to the building to minimize transmission of vibration to the building structure.

3.03 INSTALLATION OF CONDUITS:
C. Conduit Penetration:
1. Penetrating fire rated floor or wall: Install conduit in conduit sleeve or framed opening.
Seal penetration with fire retardant sealant specified herein.
2. Penetrating roof or exterior wall: Avoid penetrating roof or exterior wall where possible.
Where penetrations are necessary, building weatherproof integrity must be preserved.
3. Penetrating sound insulated or air plenum wall: Install conduit in conduit sleeve and seal penetration as detailed on the drawings.
4. Penetrating non-fire rated dry wall:
Conduit sleeves are not required.
Penetrations must be sealed with plaster prior to painting.
Penetrations made after wall finish is applied must be as small as possible and provided with escutcheons, one on each side of wall.
5. Penetrating suspended ceiling:
Cut hole as small as possible to permit conduit penetration.
Provide escutcheon for each conduit below ceiling.

3.04 CONNECTIONS TO EQUIPMENT:
A. General:
1. Furnish and install required power supply conduit and wiring to all equipment. See below for other wiring required.
2. Furnish and install a disconnect switch immediately ahead of and adjacent to each magnetic motor starter or appliance unless the motor appliance is located adjacent and within sight of the serving panelboard, circuit breaker or switch. Verify all equipment nameplate current ratings prior to installation.
3. Install all rough-in work for equipment from approved shop drawings to suit the specific requirements of the equipment.
4. Furnish and install manual thermal protection for all motors not integrally equipped with thermal protection.
5. Furnish 120 Volt power to each control panel and time switch requiring a source of power to operate.

3.05 INSTALLATION OF WIRES:
A. Pull no wire into any portion of the conduit system until all construction work which might damage the wire has been completed.
B. Install all wire continuous from outlet to outlet or terminal to terminal. Splices in cables when required shall be made in handholes, pull boxes or junction boxes. Make branch circuit splices in outlet boxes with 8" of correctly color-coded tails left in the box.
C. Splices in wires and cables shall be made utilizing materials and methods described herein before.
D. Make all ground, neutral and line connections to receptacle and wiring device terminals as recommended by manufacture. Provide ground jumper from outlet box to ground terminal of devices when the device is not approved for grounding through the mounting screws.
E. Provide Brady wire markers where number of conductors in a box exceeds four.
F. Megger and record insulation resistance of all 600 Volt insulated conductors size #4/0 and larger using 500 Volt megger for one minute. Make tests with circuits isolated from source and load.

3.06 WIRE COLOR CODE:
Color coding shall be continuous for wire #12 through #10 AWG. Phase conductors #8 and larger and nconductors of any size in cable assemblies may have colored phasing tape at terminations.
Color code wires as follows:

Voltage	Phase A	Phase B	Phase C	Neutral	Ground
120/208V	Black	Red	Blue	White	Green
277/480V	Brown	Orange	Yellow	Gray	Green

3.07 IDENTIFICATION:
A. Provide nameplates for switchgears, panelboards, and all similar devices. Nameplates shall be screwed (no adhesives) engraved bakelite or photo-etched metallic nameplate identification showing panel designation, voltage and phase in minimum 1/4" high letters.
B. Provide dymo labels on all lighting switches and convenience and special purpose receptacles to show panel and circuit number to which the device is connected.
C. Each panelboard shall contain a metal-framed circuit directory inside cover, with plastic protector.
D. Panelboard Schedule: After completion of work, provide typewritten updated panelboard schedules for all panelboards.

3.08 REMODELING WORK:
A. Existing electrical wiring which will not be made obsolete and which will be disturbed due to construction changes required by this contract shall be restored to operating condition. Where construction changes require, outlets and conduit runs shall be relocated. Extend conduits and pull in new wiring or install junction boxes and splice in new wiring.
B. Outlets from which fixtures, switches, receptacles, and/or other electrical devices are moved and which are not replaced or reused shall be removed, where outlets boxes, etc., are completely removed, the contractor shall cut off conduits and remove wiring.
C. Where conduits extending through floors are to be abandoned, the contractor shall cut and cap or plug conduit, and the conduit shall not protrude above the floor.
D. Where existing conduit is to be abandoned, the conduit shall be removed if it isexposed, in a crawl space or in accessible ceiling. Where it is impossible to remove the conduit, it shall be cut off and capped or plugged.
E. Remove all existing wiring not reused or required to maintain continuity to circuits to remain.
F. The contractor shall be held fully responsible for the proper restoration of all existing surfaces requiring patching, plastering, painting and/or other repairs due to the installation of electrical work under the terms of this specification. Close all openings, repair all surfaces, etc., as required.
G. Maintain circuit continuity to areas outside of this work. provide new conduit and conductors as required to maintain continuity and maintain area as existing.

3.09 GROUNDING:
A. Electrical service and separately derived alternating current system shall be grounded in accordance with NEC Article 250-3 to 250-26, inclusive.
B. Ground non-current carrying metal parts of electrical equipment enclosures, frames, conductor raceways or cable trays to provide a low impendance path for line-to-ground fault current and to band all non-current carrying metal parts together. Provide ground conductor in each raceway system in addition to conductors shown. Equipment ground conductor shall be electrically and mechanically continuous from the electrical circuit source to the equipment to be grounded. Size ground conductors per NEC Article 250-95 unless larger conductors are shown on drawings.
C. Grounding conductors shall be identified with green insulation. Where green insulation is not available on larger sizes, black insulation shall be used and suitable identified with green tape at each junction box or device enclosure.

END OF SECTION

Cuschieri Horton Architects
1475 S. Bascom Ave, Suite 204
Campbell, California 95008
408.371.8200 Fx 408.371.8201

ACIES ENGINEERING
3371 Olcott Street
Santa Clara, CA 95054
ph: (408) 522-5255
fx: (408) 522-5260
info@acies.net

Copyright © 2019

REGISTERED PROFESSIONAL ENGINEER
TOMISLAV Z. GAJIC
No.E15130
Exp.06/30/20
ELECTRICAL
STATE OF CALIFORNIA

ELECTRICAL SPECIFICATIONS

TOWN OF LOS GATOS
ENGINEERING BUILDING TI ~~AND STORAGE BUILDING~~
41 MILES AVENUE,
LOS GATOS, CA 95030

REVISIONS

NO.	ITEM	DATE
△	RESPONSE TO FIRST REVIEW COMMENTS	6/4/20

PERMIT #:

SUBMITTAL:
CITY SUBMITTAL SET
DRAWN BY:
CHECKED BY:
JOB NO: 1826
DATE: 12/04/19

SHEET NO.
E0.2

7/23/2020 2:32 PM

SINGLE LINE DIAGRAM

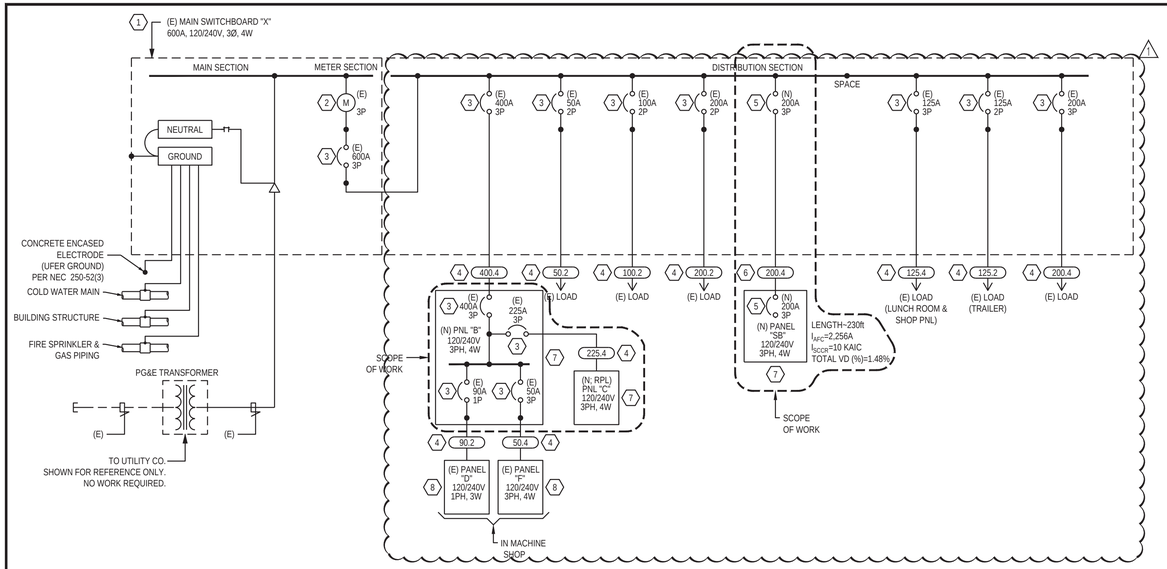

COPPER FEEDER SCHEDULE

FEEDER TAG	CONDUITS MET	CONDUITS SETS	CONDUITS RNC	CONDUCTORS PER SET PHASE/NEUTRAL	CONDUCTORS PER SET GROUND	NOTES
600.4	3.00"	2	4.00"	(4) 350KCMIL	#1	-
600.3	2.50"	2	3.00"	(3) 350KCMIL	#1	-
500.4	2.50"	2	4.00"	(4) 250KCMIL	#2	-
500.3	2.50"	2	4.00"	(3) 250KCMIL	#2	-
450.4	2.50"	2	3.00"	(4) #4/0	#2	-
450.3	2.00"	2	2.50"	(3) #4/0	#2	-
400.4	2.00"	2	2.50"	(4) #3/0	#2	-
400.3	2.00"	2	2.50"	(3) #3/0	#2	-
350.4	3.50"	1	4.00"	(4) 500KCMIL	#2	-
350.3	2.50"	1	4.00"	(3) 500KCMIL	#2	-
300.4	3.00"	1	3.00"	(4) 350KCMIL	#4	-
300.3	2.50"	1	3.00"	(3) 350KCMIL	#4	-
225.4	2.50"	1	3.00"	(4) #4/0	#4	-
200.4	2.00"	1	2.50"	(4) #3/0	#6	-
200.3	2.00"	1	2.50"	(3) #3/0	#6	-
175.4	2.00"	1	2.50"	(4) #3/0	#6	-
175.3	1.50"	1	2.50"	(3) #3/0	#6	-
150.4	2.00"	1	2.50"	(4) #1/0	#6	-
150.3	1.50"	1	2.50"	(3) #1/0	#6	-
125.4	1.50"	1	1.50"	(4) #1	#6	-
125.3	1.25"	1	1.50"	(3) #1	#6	-
100.4	1.25"	1	1.50"	(4) #1	#8	-
100.3	1.25"	1	1.50"	(3) #1	#8	-
90.4	1.25"	1	1.50"	(4) #2	#8	-
90.3	1.25"	1	1.50"	(3) #2	#8	-
80.4	1.25"	1	1.50"	(4) #3	#8	-
80.3	1.00"	1	1.50"	(3) #3	#8	-
70.4	1.25"	1	1.50"	(4) #4	#8	-
70.3	1.00"	1	1.50"	(3) #4	#8	-
60.4	1.00"	1	1.00"	(4) #4	#10	-
60.3	0.75"	1	1.00"	(3) #4	#10	-
50.4	1.00"	1	1.00"	(4) #6	#10	-
50.3	0.75"	1	1.00"	(3) #6	#10	-
40.4	0.75"	1	1.00"	(4) #8	#10	-
40.3	0.75"	1	1.00"	(3) #8	#10	-
30.4	0.75"	1	1.00"	(4) #10	#10	-
30.3	0.75"	1	1.00"	(3) #10	#10	-
20.4	0.75"	1	1.00"	(4) #12	#12	-
20.3	0.75"	1	1.00"	(3) #12	#12	-

COPPER FEEDER SCHEDULE NOTES

1.	CONDUCTORS AND CONDUITS SHOWN IN THIS SCHEDULE ARE BASED ON COPPER CONDUCTORS WITH THHN/THWN INSULATION.
2.	THIS SCHEDULE SHALL BE USED ON ALL FEEDERS SERVING LOADS WHERE THE CIRCUIT BREAKER SIZE MATCHES THE AMPACITY OF ITS FEEDER. USE THE "MOTOR CIRCUIT SCHEDULE" FOR LOADS, SUCH AS MOTORS, PUMPS, FANS, CHILLERS, ETC., WHERE THE CIRCUIT BREAKER SIZE IS LARGER THAN THE AMPACITY OF ITS FEEDER.
3.	PROVIDE GROUND WIRE NOTED ABOVE IN ALL FEEDERS AND BRANCH CIRCUITS. WHERE MULTIPLE CONDUITS ARE INDICATED PROVIDE NOTED GROUND WIRE IN EACH CONDUIT.
4.	NOT ALL FEEDERS ARE NECESSARILY USED ON THIS PROJECT.
5.	NOMINAL AMPACITIES GREATER THAN 100 AMPS ARE FOR 75 DEG..C TERMINALS.

GENERAL NOTES

#	NOTES
1	ALL NEW COMPONENTS SHOWN ON THE SINGLE LINE DIAGRAM SHALL BE "SERIES-COMBINATION RATED SYSTEM" ADEQUATE FOR THE MAXIMUM FAULT CURRENT AVAILABLE AT THE POINT OF APPLICATION, INCORPORATING THE CURRENT LIMITING DEVICES AS SPECIFIED. SHOP DRAWINGS SHALL INDICATE SERIES-COMBINATION RATING AND INCLUDE A COPY OF ALL LABELING, INCLUDING RESPECTIVE UL LISTING. VERIFY AVAILABLE SHORT CIRCUIT CURRENT WITH PG&E PRIOR TO ORDERING EQUIPMENT.
2	ALL CONDUCTORS SHALL BE COPPER TYPE THHN/THWN, EXCEPT AS INDICATED FOR RESIDENTIAL UNIT LOAD CENTER FEEDERS, WHERE CONDUCTORS MAY BE COPPER OR ALUMINUM.
3	ONLY NEW AND U.L. LISTED EQUIPMENT SHALL BE USED.
4	ONLY U.L. LISTED EQUIPMENT SHALL BE USED.
5	RATING OF ALL OVERCURRENT PROTECTION DEVICES, SWITCHES AND MAGNETIC STARTERS TO BE VERIFIED WITH NAMEPLATE RATING OF ASSOCIATED UNIT AND TO BE REVISED AS REQUIRED.
6	PROVIDE NOTATION FOR ARC-FLASH HAZARD WARNING PER 2013 CEC SEC. 110.16.
7	PROVIDE NOTATION FOR PROVISION OF POSTING MAXIMUM AFC AT SERVICE EQUIPMENT PER 2016 CEC SEC. 110.24(A).
8	PROVIDE NEW ELECTRICAL SWITCHBOARD & PANEL-BOARDS RATED BY THE AIC RATING IN KA PER THE FAULT CURRENT CALCULATIONS PER 2019 CEC 110.9 & 110.10. FIELD VERIFY PER ACTUAL FIELD CONDITIONS & AMBIENT CONDITIONS.
9	CONTRACTOR TO COORDINATE WITH CLIENT, OWNER AND PG&E FOR AVAILABLE FAULT-CURRENT AT THE SECONDARY OF THE PG&E TRANSFORMER. CONTRACTOR TO SUBMIT TO AHJ FOR APPROVAL, LETTER FROM PG&E STATING THE AVAILABLE FAULT-CURRENT, DETAILED SHORT-CIRCUIT CALCULATIONS AND AIC RATINGS OF THE ELECTRICAL EQUIPMENT.

KEYED NOTES:

NUMBER	NOTES
1	EXISTING SERVICE SWITCHBOARD TO REMAIN. RATING AS SHOWN. KAIC RATING SHALL BE CONFIRMED WITH UTILITY.
2	EXISTING WATH HOUR METER W/H/ SERVICE METERING DEVICE MEETING THE REQUIREMENTS OF 2016 TITLE 24 SECTION 130.5(A). NO WORK REQUIRED.
3	EXISTING CIRCUIT BREAKER TO REMAIN. NO WORK REQUIRED
4	EXISTING FEEDER, CONDUITS AND WIRES TO REMAIN. NO WORK REQUIRED.
5	NEW CIRCUIT BREAKER TO PROVIDE. RATING AS SHOWN.
6	NEW FEEDER, PROVIDE CONDUIT AND WIRES AS SHOWN.
7	NEW ELECTRICAL PANEL TO PROVIDE. SEE PLANS FOR MORE INFORMATION. FIELD VERIFY EXACT LOCATION AND OTHER REQUIREMENTS. PROVIDE TYPEWRITTEN SCHEDULE UPON COMPLETION OF THIS PROJECT. SEE PANEL SCHEDULE BELOW.
8	EXISTING ELECTRICAL PANEL TO REMAIN. FIELD VERIFY EXACT LOCATION. PROVIDE UPDATED TYPEWRITTEN SCHEDULE UPON COMPLETION OF THIS PROJECT. SEE PANEL SCHEDULE BELOW.

PANEL SCHEDULES

(E) MSB "X"

VOLTAGE: 120 / 240 V | BUS RATING: 600 A | MAIN REQUIREMENT: 600 A MCB
WIRE: 4 | PHASE: 3 | TYPE: (E)
MOUNTING: SURFACE MOUNTED | AIC RATING: PER "PG & E" | CONDITION: EXISTING
NOTES: FEED FROM (E) | OVERHEAD UTILITY

CKT#	NOTES	LOAD	CB P	CB T	LOAD DESCRIPTION	LOAD KVA	PHASE	LOAD KVA	LOAD DESCRIPTION	CB P	CB T	LOAD	NOTES	CKT#
1						60.82	A	1.00	(N) PANEL "SB" (NEW STEEL BUILDING)	3	200			2
3						90.64	B	7.33	-					4
5	(E)		3	400	EXISTING BUILDING SERVICE	46.75	C	2.37	-					6
7							A		SPACE					8
9							B		SPACE					10
11							C		SPACE					12
13	(E)	G	2	50	EXISTING LOAD	1.80	A	5.20	EXISTING LOAD (LUNCH RM PANEL, SHOP PANEL)	3	125	G	(E)	14
15	(E)	G	-	-	-	1.80	B	5.20	-	-	-	G	(E)	16
17					HIGH LEG		C	5.20	-	-	-	G	(E)	18
19	(E)	G	2	100	EXISTING LOAD	3.60	A	4.50	EXISTING LOAD (TRAILER)	2	125	G	(E)	20
21	(E)	G	-	-	-	3.60	B	4.50	-	-	-	G	(E)	22
23					HIGH LEG		C		HIGH LEG					24
25	(E)	G	2	200	EXISTING LOAD	7.20	A	8.31	EXISTING LOAD	3	200	G	(E)	26
27	(E)	G	-	-	-	7.20	B	8.31	-	-	-	G	(E)	28
29					HIGH LEG		C	8.31	-	-	-	G	(E)	30

CONNECTED LOAD:			DEMAND LOAD:	
PHASE A	98.5	KVA	65.36	KVA
PHASE B	128.6	KVA	68.88	KVA
PHASE C	67.6	KVA	60.19	KVA
TOTAL	294.71	KVA	194.43	KVA

DEMAND LOAD CALCULATION

DEMAND LOAD	SUBTOTAL	NEC DEMAND FACTOR	
CONTINUOUS LOAD (C)	15.99	125%	19.98
DEDICATED LOAD (D)	30.06	100%	30.06
GENERAL RECEPTACLE (G)	119.63	100% of 1st 10kVA & 50% of remaining	64.8
KITCHEN EQUIPMENT (K)	1.15	100%	0.75
LARGEST MOTOR LOAD (M)	59.85	125% of largest motor + 100% remaining	66.35
		TOTAL DEMAND KVA	181.99
		AMPS @ 120V, PHASE "A":	544.70
		AMPS @ 120V, PHASE "B":	573.97
		AMPS @ 120V, PHASE "C":	501.57

NOTES: (E) - EXISTING CIRCUITS
1. HIGH-LEG CONDUCTOR TERMINATES TO THE C (CENTER) PHASE ON A 4-WIRE, DELTA CONNECTED SYSTEM. PERMANENTLY FIELD-MARKED WITH "CAUTION: "C" PHASE HAS 208V TO GROUND".

(N) PNL "B"

MAIN BLDG PANEL
VOLTAGE: 120 / 240 V | BUS RATING: 400 A | MAIN REQUIREMENT: 400 A MCB
WIRE: 4 | PHASE: 3 | TYPE: 3R
MOUNTING: SURFACE MOUNTED | AIC RATING: 10kAIC | CONDITION: NEW
NOTES: FEED FROM (E) | MSB "X"

CKT#	NOTES	LOAD	CB P	CB T	LOAD DESCRIPTION	LOAD KVA	PHASE	LOAD KVA	LOAD DESCRIPTION	CB P	CB T	LOAD	NOTES	CKT#
1	(E)	G	1	20	EXISTING LOAD (REC - PARKS)	0.72	A	1.92	EXISTING LOAD (WATER HEATER)	2	20	D	(E)	2
3	(E)	G	1	20	EXISTING LOAD (STORAGE)	0.72	B	1.92	-	-	-	D	(E)	4
5	(E)	M	1	20	EXISTING LOAD (EF-4)	0.72	C	3.60	EXISTING LOAD (AC UNIT)	2	50	M	(E)	6
7	(E)	M	1	20	EXISTING LOAD (UH-1, UH-2, UH-3)	0.72	A	3.60	-	-	-	M	(E)	8
9	(E)	M	2	90	EXISTING LOAD (PANEL "D" - MECH. BAY)	3.24	B	0.72	EXISTING LOAD	1	20	G	(E)	10
11	(E)	M	-	-	-	3.24	C	0.72	EXISTING LOAD	1	20	G	(E)	12
13	(E)	G	1	20	EXISTING LOAD	0.72	A	0.72	EXISTING LOAD	1	20	G	(E)	14
15	(E)	G	1	20	EXISTING LOAD	0.72	B	0.72	EXISTING LOAD	1	20	G	(E)	16
17		D	1	20	J. BOX (AUDIO/VISUAL ALARM)	0.18	C	2.88	EXISTING LOAD (CAR CHARGER)	2	40	C	(E)	18
19		M	2	50	RTU-1	3.84	A	2.88	-	-	-	C	(E)	20
21		M	-	-	-	3.84	B	2.88	EXISTING LOAD (CAR CHARGER)	2	40	C	(E)	22
23		D	1	20	DPS (TRAFFIC ROOM)	1.20	C	2.88	-	-	-	C	(E)	24
25		D	1	30	WH-1 (RM # 105 UNISEX RESTROOM)	3.60	A	1.20	REC (RM # 106_SERVER CABINET)	1	20	D		26
27		M	2	60	RTU-2	4.68	B	1.20	REC (RM # 106_SERVER CABINET)	1	20	D		28
29		M	-	-	-	4.68	C	1.20	REC (NEXT TO RM # 109_SERVER CABINET)	1	20	D		30
31	(E)	G	3	50	EXISTING LOAD (PANEL "F" - GARAGE)	2.08	A	4.16	EXISTING LOAD (AIR COMPRESSOR)	3	50	ML	(E)	32
33	(E)	G	-	-	-	2.08	B	4.16	-	-	-	ML	(E)	34
35	(E)	G	-	-	-	2.08	C	4.16	-	-	-	ML	(E)	36
37		M	2	15	CU-1	0.84	A	0.02	CP-1	1	20	D		38
39		M	-	-	-	0.84	B	0.12	FC-1	2	15	M		40
41					SPACE		C	0.12	-	-	-	M		42
							A	16.85	PANEL "C"	3	225			
							B	15.57	-	-	-			
							C	15.66	-					

CONNECTED LOAD:			DEMAND LOAD:	
PHASE A	43.9	KVA	43.97	KVA
PHASE B	43.4	KVA	47.23	KVA
PHASE C	43.3	KVA	46.75	KVA
TOTAL	130.59	KVA	137.96	KVA

DEMAND LOAD CALCULATION

DEMAND LOAD	SUBTOTAL	NEC DEMAND FACTOR	
CONTINUOUS LOAD (C)	14.51	125%	18.14
DEDICATED LOAD (D)	28.81	100%	28.81
GENERAL RECEPTACLE (G)	39.56	100% of 1st 10kVA & 50% of remaining	24.78
KITCHEN EQUIPMENT (K)	1.15	100%	0.75
LARGEST MOTOR LOAD (M)	46.59	125% of largest motor + 100% remaining	49.67
		TOTAL DEMAND KVA	122.15
		AMPS @ 120V, PHASE "A":	366.43
		AMPS @ 120V, PHASE "B":	393.61
		AMPS @ 120V, PHASE "C":	389.62

NOTES: (E) - EXISTING CIRCUITS
1. HIGH-LEG CONDUCTOR TERMINATES TO THE C (CENTER) PHASE ON A 4-WIRE, DELTA CONNECTED SYSTEM. PERMANENTLY FIELD-MARKED WITH "CAUTION: "C" PHASE HAS 208V TO GROUND".

Cuschieri Horton Architects
1475 S. Bascom Ave, Suite 204
Campbell, California 95008
408.371.8200 Fx 408.371.8201

ACIES ENGINEERING
3371 Olcott Street
Santa Clara, CA 95054
ph: (408) 522-5255
fx: (408) 522-5260
info@acies.net

Copyright © 2019

PARTIAL SINGLE LINE DIAGRAM & PANEL SCHEDULES

TOWN OF LOS GATOS
ENGINEERING BUILDING TI ~~AND STORAGE BUILDING~~
41 MILES AVENUE,
LOS GATOS, CA 95030

REVISIONS

NO.	ITEM	DATE
1	RESPONSE TO FIRST REVIEW COMMENTS	6/4/20

PERMIT #:

SUBMITTAL:
CITY SUBMITTAL SET
DRAWN BY:
CHECKED BY:
JOB NO: 1826
DATE: 12/04/19

SHEET NO.
E0.3A

7/23/2020 2:32 PM

PANEL SCHEDULES

(N) PNL "C"

VOLTAGE: 120 / 240 V | WIRE: 4 | MOUNTING: SURFACE MOUNTED | NOTES:
BUS RATING: 225 A | PHASE: 3 | AIC RATING: 10kAIC | FEED FROM (E)
MAIN REQUIREMENT: 225A MCB | TYPE: 1 | CONDITION: NEW | MSB "X"

CKT#	NOTES	LOAD	CB P	CB T	LOAD DESCRIPTION	LOAD KVA	PHASE	LOAD KVA	LOAD DESCRIPTION	CB P	CB T	LOAD	NOTES	CKT#
1	(E)	C	1	20	LTG (RM: 101-108)	0.77	A	0.54	REC (RM # 113_OPEN OFFICE)	1	20	G	(E)	2
3	(E)	C	1	20	LTG (RM: 109, 109-112, 114, 119-121)	0.65	B	0.54	REC (RM # 113_OPEN OFFICE)	1	20	G	(E)	4
5	(E)	C	1	20	LTG (RM: 110-113)	0.86	C	0.72	REC (RM # 113_OPEN OFFICE-PRINTER)	1	20	D	(E)	6
7	(E)	G	1	20	REC (RM # 113_OPEN OFFICE)	0.90	A	0.72	REC (RM # 115, # 116_OFFICES)	1	20	G	(E)	8
9	(E)	C	1	20	EXISTING LOAD (PHOTOCELL - OUTSIDE LIGHTS)	0.72	B	0.72	REC (RM # 116, # 117_OFFICES)	1	20	G	(E)	10
11	(E)	G	1	20	REC (RM # 101_MAINTENANCE OFFICE)	0.72	C	0.72	REC (RM # 117, # 118_OFFICES)	1	20	G	(E)	12
13	(E)	G	1	20	REC (RM # 102_MAINTENANCE OFFICE)	0.72	A	0.90	REC (RM # 119_OFFICES)	1	20	G	(E)	14
15	(E)	G	1	20	REC (RM # 103_MAINTENANCE OPEN OFFICE)	0.54	B	1.00	REC (RM # 114_TRAFFIC-RACK)	1	20	G	(E)	16
17	(E)	G	1	20	REC (RM # 103_MAINTENANCE OPEN OFFICE)	0.72	C	1.00	REC (RM # 114_TRAFFIC-RACK)	1	20	G	(E)	18
19	(E)	G	1	20	REC (RM # 103_MAINTENANCE OPEN OFFICE)	0.72	A	0.60	REC (RM # 112_KITCHEN/BREAK - REFRIGERATOR)	1	20	K	(E)	20
21	(E)	D	1	20	REC (RM # 103_MAINTEN. OPEN OFFICE-PRINTER)	0.72	B	0.18	REC (RM # 112_KITCHEN/BREAK - APPLIANCES)	1	20	K	(E)	22
23	(E)	G	2	100	EXISTING LOAD (BASEBALL)	3.60	C	0.37	REC (RM # 112_KITCHEN/BREAK - SINK)	1	20	K	(E)	24
25	(E)	G	-	-	-	3.60	A	1.08	REC (RM # 109_CONFERENCE ROOM)	1	20	G	(E)	26
27		D	1	30	IWH-1 (RM # 105_UNISEX RESTROOM)	3.60	B	0.54	REC (RM # 114_TRAFFIC)	1	20	G	(E)	28
29		G	1	20	REC (RM # 108_RECEPTION/LOBBY)	0.54	C	0.05	SMOKE DETECTOR(RM # 101)	1	20	D	(E)	30
31	(E)	G	1	20	EXISTING LOAD (TELEPHONE BOARD)	0.72	A	0.54	REC (RM # 111_CONFERENCE ROOM)	1	20	G	(E)	32
33		G	1	20	REC (RM # 106, # 107, # 110_STORAGE, HALLWAYS)	0.90	B	0.90	REC (RM # 120, # 121_OFFICES)	1	20	G	(E)	34
35	(E)	G	1	20	REC (RM # 104,105_BATHROOMS)	0.36	C	1.44	EXISTING LOAD (TRAILER)	2	40	G	(E)	36
37	(E)	D	1	30	IWH-1 (RM # 112_KITCHEN/BREAK)	3.60	A	1.44	-	-	-	G	(E)	38
39	(E)	D	2	40	EXISTING LOAD (WATER HEATER)	3.84	B	0.72	EXISTING LOAD (MECH. SHOP)	1	20	G	(E)	40
41	(E)	D	-	-	-	3.84	C	0.72	EXISTING LOAD (MECH. SHOP)	1	20	G	(E)	42

CONNECTED LOAD:		DEMAND LOAD:	
PHASE A	16.85 KVA	16.04 KVA	
PHASE B	15.57 KVA	15.89 KVA	
PHASE C	15.66 KVA	15.84 KVA	
TOTAL	3.00 KVA	47.77 KVA	

DEMAND LOAD CALCULATION			
DEMAND LOAD	SUBTOTAL	NEC DEMAND FACTOR	
CONTINUOUS LOAD (C)	2.99	125%	3.74
DEDICATED LOAD (D)	16.37	100%	16.37
GENERAL RECEPTACLE (G)	27.56	100% of 1st 10kVA & 50% of remaining	18.78
KITCHEN EQUIPMENT (K)	1.15	90%	0.75
LARGEST MOTOR LOAD (M)	0.00	125% of largest motor + 100% remaining	0.00
TOTAL DEMAND KVA			39.64
AMPS @ 120V, PHASE "A":			133.67
AMPS @ 120V, PHASE "B":			132.41
AMPS @ 120V, PHASE "C":			132.01

NOTES: (E) - EXISTING CIRCUITS

(E) PNL "D"

SHOP

VOLTAGE: 120 / 240 V | WIRE: 3 | MOUNTING: SURFACE MOUNTED | NOTES:
BUS RATING: 100 A | PHASE: 1 | AIC RATING: 10kAIC | FEED FROM (E)
MAIN REQUIREMENT: MLO | TYPE: (E) | CONDITION: EXISTING | MSB "X"

CKT#	NOTES	LOAD	CB P	CB T	LOAD DESCRIPTION	LOAD KVA	PHASE	LOAD KVA	LOAD DESCRIPTION	CB P	CB T	LOAD	NOTES	CKT#
1					SPACE		A							
3	(E)	C	1	15	EXISTING LOAD	0.54	B							
5	(E)	C	2	50	EXISTING LOAD	4.80	A							
5	(E)	C	-	-	-	4.80	B							
7	(E)	C	1	20	EXISTING LOAD	0.72	A							
9	(E)	C	1	20	EXISTING LOAD	0.72	B							
11	(E)	C	1	20	EXISTING LOAD	0.72	A							
13	(E)	C	1	20	EXISTING LOAD	0.72	B							
15	(E)	C	1	20	EXISTING LOAD	0.72	A							
17	(E)	C	1	20	EXISTING LOAD	0.72	B							
19	(E)	C	1	20	EXISTING LOAD	0.72	A							

CONNECTED LOAD:		DEMAND LOAD:	
PHASE A	7.68 KVA	9.60 KVA	
PHASE B	7.50 KVA	9.38 KVA	
TOTAL	0.00 KVA	18.98 KVA	

DEMAND LOAD CALCULATION			
DEMAND LOAD	SUBTOTAL	NEC DEMAND FACTOR	
CONTINUOUS LOAD (C)	15.18	125%	18.98
DEDICATED LOAD (D)	0.00	100%	0.00
GENERAL RECEPTACLE (G)	0.00	100% of 1st 10kVA & 50% of remaining	0.00
KITCHEN EQUIPMENT (K)	0.00	100%	0.00
LARGEST MOTOR LOAD (M)	0.00	125% of largest motor + 100% remaining	0.00
TOTAL DEMAND KVA			18.98
AMPS @ 120V, PHASE "A":			80.00
AMPS @ 120V PHASE "B":			78.13

NOTES: (E) - EXISTING CIRCUITS

(N) PNL "SB"

STEEL BUILDING

VOLTAGE: 120 / 240 V | WIRE: 4 | MOUNTING: SURFACE MOUNTED | NOTES:
BUS RATING: 225 A | PHASE: 3 | AIC RATING: 10kAIC | FEED FROM (E)
MAIN REQUIREMENT: 225 A MCB | TYPE: 1 | CONDITION: NEW | MSB "X"

CKT#	NOTES	LOAD	CB P	CB T	LOAD DESCRIPTION	LOAD KVA	PHASE	LOAD KVA	LOAD DESCRIPTION	CB P	CB T	LOAD	NOTES	CKT#
1		C	1	20	LTG (NEW BUILDING STORAGE)	0.48	A	4.45	RTU-3	3	50	ML		2
3		C	1	20	LTG (NEW BUILDING STORAGE)	0.72	B	4.45	-	-	-	ML		4
5		C	1	20	OUTDOOR LTG (NEW BUILDING STORAGE)	0.27	C	4.45	-	-	-	ML		6
7		G	1	20	REC (STORAGE CONDITIONED - NEW BUILDING)	0.90	A	0.05	SMOKE DETECTOR	1	20	D		8
9		G	1	20	REC (STORAGE CONDITIONED - NEW BUILDING)	0.90	B		SPACE					10
11		D	1	20	J. BOX (ROLL-UP DOOR)	1.20	C		SPACE					12
13		G	1	20	REC (STORAGE UNCONDITIONED - NEW BUILDING)	0.90	A		SPACE					14
15		G	1	20	REC (STORAGE UNCONDITIONED - NEW BUILDING)	0.90	B		SPACE					16
17		G	1	20	J. BOX (ROLL-UP DOOR)	1.20	C		SPACE					18
19		G	1	20	REC (EXTERIOR WALL)	0.18	A		SPACE					20
21		G	1	20	REC (EXTERIOR WALL)	0.18	B		SPACE					22
23		G	1	20	REC (EXTERIOR NEAR RTU)	0.18	C		SPACE					24
25					SPACE		A		SPACE					26
27					SPACE		B		SPACE					28
29					SPACE		C		SPACE					30
31					SPACE		A		SPACE					32
33					SPACE		B		SPACE					34
35					SPACE		C		SPACE					36
37					SPACE		A		SPACE					38
39					SPACE		B		SPACE					40
41					SPACE		C		SPACE					42

NOT IN CONTRACT

CONNECTED LOAD:		DEMAND LOAD:	
PHASE A	7.0 KVA	7.08 KVA	
PHASE B	7.1 KVA	7.33 KVA	
PHASE C	7.3 KVA	7.37 KVA	
TOTAL	21.41 KVA	21.77 KVA	

DEMAND LOAD CALCULATION			
DEMAND LOAD	SUBTOTAL	NEC DEMAND FACTOR	
CONTINUOUS LOAD (C)	1.47	125%	1.84
DEDICATED LOAD (D)	1.25	100%	1.25
GENERAL RECEPTACLE (G)	5.34	100% of 1st 10kVA & 50% of remaining	5.34
KITCHEN EQUIPMENT (K)	0.00	100%	0.00
LARGEST MOTOR LOAD (M)	13.34	125% of largest motor + 100% remaining	16.68
TOTAL DEMAND KVA			25.11
AMPS @ 120V, PHASE "A":			58.98
AMPS @ 120V, PHASE "B":			61.07
AMPS @ 120V, PHASE "C":			61.41

NOTES: (E) - EXISTING CIRCUITS
1. HIGHLIGHTED CONDUCTOR TERMINATES TO THE C (CENTER) PHASE ON A 4-WIRE, DELTA CONNECTED SYSTEM. PERMANENTLY FIELD-MARKED WITH "CAUTION: "C" PHASE HAS 208V TO GROUND".

Cuschieri Horton Architects
1475 S. Bascom Ave, Suite 204
Campbell, California 95008
408.371.8200 Fx 408.371.8201

ACIES ENGINEERING
3371 Olcott Street
Santa Clara, CA 95054
ph: (408) 522-5255
fx: (408) 522-5260
info@acies.net

Copyright © 2019

REGISTERED PROFESSIONAL ENGINEER
Nick E Ciriello
No. E15130
Exp. 06/30/20
ELECTRICAL
STATE OF CALIFORNIA

PANEL SCHEDULES

TOWN OF LOS GATOS
ENGINEERING BUILDING TI AND STORAGE BUILDING
41 MILES AVENUE,
LOS GATOS, CA 95030

REVISIONS

NO.	ITEM	DATE
1	RESPONSE TO FIRST REVIEW COMMENTS	6/4/20

PERMIT #:

SUBMITTAL:
CITY SUBMITTAL SET
DRAWN BY:
CHECKED BY:
JOB NO: 1826 | DATE: 12/04/19

SHEET NO.
E0.3B

7/23/2020 2:32 PM

TITLE 24 FORMS - INDOOR LIGHTING

STATE OF CALIFORNIA
INDOOR LIGHTING
CEC-NRCC-LTI-01-E (Revised 04/16)
CALIFORNIA ENERGY COMMISSION

CERTIFICATE OF COMPLIANCE — NRCC-LTI-01-E
Indoor Lighting — (Page 1 of 6)
Project Name: **TOWN OF LOS GATOS ENGINEERING BUILDING TI** — Date Prepared: **7/23/2020**

A. General Information

Climate Zone: **4** — Conditioned Floor Area : **2625 SQFT.**
Unconditioned Floor Area :

Building Type: ☑ Nonresidential ☐ High-Rise Residential ☐ Hotel/Motel ☐ Schools ☐ Relocatable Public Schools ☑ Conditioned Spaces ☐ Unconditioned Spaces
Phase of Construction: ☐ New Construction ☑ Addition ☑ Alteration
Method of Compliance: ☐ Complete Building ☑ Area Category ☐ Tailored
Project Address: 41 MILES AVENUE, LOS GATOS, CA 95030

B. Lighting Compliance Documents (select yes for each document included)

For detailed instructions on the use of this and all Energy Efficiency Standards compliance documents, refer to the Nonresidential Manual published by the California Energy Commission.

YES	NO	COMP. DOC.	TITLE
☑	☐	NRCC-LIT-01-E	Certificate of Compliance. All Pages required on plans for all submittals.
☑	☐	NRCC-LIT-02-E	Lighting Controls, Certificate of Compliance, and PAF Calculation. All Pages required on plans for all submittals.
☑	☐	NRCC-LIT-03-E	Indoor Lighting Power Allowance
☐	☑	NRCC-LIT-04-E	Tailored Method Worksheets
☐	☑	NRCC-LIT-05-E	Line Voltage Track Lighting Worksheets
☐	☑	NRCC-LIT-06-E	Indoor Lighting Existing Conditions

STATE OF CALIFORNIA
INDOOR LIGHTING
CEC-NRCC-LTI-01-E (Revised 04/16)
CALIFORNIA ENERGY COMMISSION

CERTIFICATE OF COMPLIANCE — NRCC-LTI-01-E
Indoor Lighting — (Page 2 of 6)
Project Name: **TOWN OF LOS GATOS ENGINEERING BUILDING TI** — Date Prepared: **7/23/2020**

C. Summary of Allowed Lighting Power

Conditioned and Unconditioned space Lighting must not be combined for compliance

	Indoor Lighting Power for Conditioned Spaces		Watts	Indoor Lighting Power for Unconditioned Spaces		Watts
01	**Installed** Lighting NRCC-LTI-01-E, page 5	+	2,036.0	**Installed** Lighting NRCC-LTI-01-E, page 5	+	
02	PORTABLE ONLY FOR OFFICES NRCC-LTI-01-E, page 4	+				
03	Minus Lighting Control Credits NRCC-LTI-02-E, page 2	-		Minus Lighting Control Credits NRCC-LTI-02-E, page 2	-	
04	Adjusted **Installed** Lighting Power (row 1 plus row 2 minus row 3)	=	2,036.0	Adjusted **Installed** Lighting Power (row 1 minus row 3)	=	0
	Complies ONLY if **Installed** ≤ **Allowed**			Complies ONLY if **Installed** ≤ **Allowed**		
05	**Allowed** Lighting Power Conditioned NRCC-LTI-03-E, page 1 Alterations with replacement luminaries that have at least 50/35% lower power compared to the original existing luminaries, may instead use the allowed wattage from NRCC-LTI-06, page 2		2,282.4	**Allowed** Lighting Power Unconditioned NRCC-LTI-03-E, page 1 Alterations with replacement luminaries that have at least 50/35% lower power compared to the original existing luminaries, may instead use the allowed wattage from NRCC-LTI-06, page 2		

D. Declaration of Required Installation Certificates

Declare by selecting yes for all Installation Certificates that will be submitted. (Retain copies and verify forms are completed and signed.)

YES	NO	Form/Title	
☑	☐	NRCI-LTI-01-E - Must be submitted for all buildings	☐ Field Inspector
☑	☐	NRCI-LTI-02-E - Must be submitted for a lighting control system, or for an Energy Management Control System (EMCS), to be recognized for compliance.	☐ Field Inspector
☑	☐	NRCI-LTI-03-E - Must be submitted for a line-voltage track lighting integral current limiter, or for a supplementary overcurrent protection panel used to energize only line-voltage track lighting, to be recognized for compliance.	☐ Field Inspector
☐	☑	NRCI-LTI-04-E - Must be submitted for two interlocked systems serving an auditorium, a convention center, a conference room, a multipurpose room, or a theater to be recognized for compliance.	☐ Field Inspector
☐	☑	NRCI-LTI-05-E - Must be submitted for a Power Adjustment Factor (PAF) to be recognized for compliance.	☐ Field Inspector
☐	☑	NRCI-LTI-06-E - Must be submitted for additional wattage installed in a video conferencing studio to be recognized for compliance.	☐ Field Inspector

STATE OF CALIFORNIA
INDOOR LIGHTING
CEC-NRCC-LTI-01-E (Revised 04/16)
CALIFORNIA ENERGY COMMISSION

CERTIFICATE OF COMPLIANCE — NRCC-LTI-01-E
Indoor Lighting — (Page 3 of 6)
Project Name: **TOWN OF LOS GATOS ENGINEERING BUILDING TI** — Date Prepared: **7/23/2020**

E. Declaration of Required Certificates of Acceptance

Declare by checking all of the Certificates of Acceptance that will be submitted. (Retain copies and verify forms are completed and signed.)

YES	NO	FORM/TITLE	
☑	☐	NRCA-LTI-02-A - Must be submitted for occupancy sensors and automatic time switch controls.	☐ Field Inspector
☑	☐	NRCA-LTI-03-A - Must be submitted for automatic daylight controls.	☐ Field Inspector
☐	☑	NRCA-LTI-04-A - Must be submitted for demand responsive lighting controls.	☐ Field Inspector

A separate Lighting Schedule Must Be Filled Out for Conditioned and Unconditioned Spaces. Installed Lighting Power listed on this Lighting Schedule is only for:
☑ **CONDITIONED SPACE** ☐ **UNCONDITIONED SPACE**

F. INDOOR LIGHTING SCHEDULE and FIELD INSPECTION ENERGY CHECKLIST

☑ The actual indoor lighting power listed on this page and on the next page includes all installed permanent and planned portable lighting systems.
☐ When Complete Building Method is used for compliance, list each different type of luminaire on separate lines.
☑ When Area Category Method or Tailored Method is used for compliance, list each different type of luminaire by each different function area on separate lines
☑ Also include track lighting in schedule, and submit the track lighting compliance form (NRCC-LTI-05-E) when line-voltage track lighting is installed.

STATE OF CALIFORNIA
INDOOR LIGHTING
CEC-NRCC-LTI-01-E (Revised 04/16)
CALIFORNIA ENERGY COMMISSION

CERTIFICATE OF COMPLIANCE — NRCC-LTI-01-E
Indoor Lighting — (Page 4 of 6)
Project Name: **TOWN OF LOS GATOS ENGINEERING BUILDING TI** — Date Prepared: **7/23/2020**

G. Installed Portable Luminaires in Offices – Exception to Section 140.6(a)

- This section shall be filled out ONLY for portable luminaires in offices (As defined in §100.1). All other planned portable luminaires shall be documented on next page of this compliance form.
- This section is used to determine if greater than 0.3 watts of portable lighting is planned for any office
- Fill out a separate line for each different office. Small offices that are typical (having the same general and portable lighting) may be grouped together. This allowance shall not be traded between offices having different lighting systems.

Office Portable Luminaire Schedule	Office Installed Portable Luminaire Watts Per Square Foot							Office Location	Field Inspector	
01	02	03	04	05	06	07	08	09	10	
Complete Luminaire Description (i.e., LED, under cabinet, furniture mounted direct/indirect)	Watts per Luminaire	Number of Luminaires	Installed portable luminaire watts in this office (G02 x G03)	Square feet of this office	Watts per square foot (G04 / G05)	If G06 ≤ 0.3, enter zero; if G06 > 0.3, (G06-0.3)	G05 x G07	Identify Office area in which these portable luminaires are installed	Pass	Fail
			0		**0**	**0**	**0**		☐	☐
			0		**0**	**0**	**0**		☐	☐
			0		**0**	**0**	**0**		☐	☐
			0		**0**	**0**	**0**		☐	☐
			0		**0**	**0**	**0**		☐	☐
			0		**0**	**0**	**0**		☐	☐
			0		**0**	**0**	**0**		☐	☐
Total installed portable luminaire watts that are greater than 0.3 W/ft² per office:								Enter sum total of all pages into NRCC-LTI-01-E; Page 2		

STATE OF CALIFORNIA
INDOOR LIGHTING
CEC-NRCC-LTI-01-E (Revised 04/16)
CALIFORNIA ENERGY COMMISSION

CERTIFICATE OF COMPLIANCE — NRCC-LTI-01-E
Indoor Lighting — (Page 5 of 6)
Project Name: **TOWN OF LOS GATOS ENGINEERING BUILDING TI** — Date Prepared: **7/23/2020**

A separate Lighting Schedule Must Be Filled Out for Conditioned and Unconditioned Spaces. Installed Lighting Power listed on this Lighting Schedule is only for:
☑ **CONDITIONED SPACE** ☐ **UNCONDITIONED SPACE**

H. INDOOR LIGHTING SCHEDULE and FIELD INSPECTION ENERGY CHECKLIST

Luminaire Schedule		Installed Watts					Location	Field Inspector [1]	
01	02	03	04		05	06	07	08	
Name or Item Tag	Complete Luminaire Description (i.e, 3 lamp fluorescent troffer, F32T8, one dimmable electronic ballast)	Watts per luminaire	How wattage was determined: CEC Default from NA8	According to §130.0(c)	Number Luminaires	Total Installed Watts in this area (H03 x H05)	Primary Function area in which these luminaires are installed	Pass	Fail
A/AE	RECESSED MTD. 2'W X 4'L LUMINAIRE	38	☐	☑	52	**1976**	ALL AREAS EXCEPT STORAGE	☐	☐
B/BE	SURFACE MTD LINEAR 4'L LUMINAIRE	30	☐	☑	2	**60**	STORAGE	☐	☐
			☐	☑				☐	☐
			☐	☑				☐	☐
			☐	☑				☐	☐
			☐	☑				☐	☐
			☐	☐				☐	☐
			☐	☐				☐	☐
			☐	☐				☐	☐
			☐	☐				☐	☐
			☐	☐				☐	☐
			☐	☐				☐	☐
			☐	☐				☐	☐
			☐	☐				☐	☐
			☐	☐				☐	☐
			☐	☐				☐	☐
			☐	☐				☐	☐
			☐	☐				☐	☐
			☐	☐				☐	☐
			☐	☐				☐	☐
			☐	☐				☐	☐
			☐	☐				☐	☐
INSTALLED WATTS PAGE TOTAL:						**2036**	Enter sum total of all pages into NRCC-LTI-01-E; Page 2		

STATE OF CALIFORNIA
INDOOR LIGHTING
CEC-NRCC-LTI-01-E (Revised 04/16)
CALIFORNIA ENERGY COMMISSION

CERTIFICATE OF COMPLIANCE — NRCC-LTI-01-E
Indoor Lighting — (Page 6 of 6)
Project Name: **TOWN OF LOS GATOS ENGINEERING BUILDING TI** — Date Prepared: **7/23/2020**

DOCUMENTATION AUTHOR'S DECLARATION STATEMENT

1. I certify that this Certificate of Compliance documentation is accurate and complete.

Documentation Author Name: **TOMISLAV GAJIC**	Documentation Author Signature:
Company: **ACIES ENGINEERING**	Signature Date: **7/23/2020**
Address: **3371 Olcott Street**	CEA Certification Identification (if applicable):
City/State/Zip: **Santa Clara, CA 95054**	Phone: **(408) 522-5255**

RESPONSIBLE PERSON'S DECLARATION STATEMENT

I certify the following under penalty of perjury, under the laws of the State of California:
1. The information provided on this Certificate of Compliance is true and correct.
2. I am eligible under Division 3 of the Business and Professions Code to accept responsibility for the building design or system design identified on this Certificate of Compliance (responsible designer).
3. The energy features and performance specifications, materials, components, and manufactured devices for the building design or system design identified on this Certificate of Compliance conform to the requirements of Title 24, Part 1 and Part 6 of the California Code of Regulations.
4. The building design features or system design features identified on this Certificate of Compliance are consistent with the information provided on other applicable compliance documents, worksheets, calculations, plans and specifications submitted to the enforcement agency for approval with this building permit application.
5. I will ensure that a completed signed copy of this Certificate of Compliance shall be made available with the building permit(s) issued for the building, and made available to the enforcement agency for all applicable inspections. I understand that a completed signed copy of this Certificate of Compliance is required to be included with the documentation the builder provides to the building owner at occupancy.

Responsible Designer Name **TOMISLAV GAJIC**	Responsible Designer Signature:
Company : **ACIES ENGINEERING**	Date Signed: **7/23/2020**
Address: **3371 Olcott Street**	License: **E15130**
City/State/Zip: **Santa Clara, CA 95054**	Phone: **(408) 522-5255**

Cuschieri Horton Architects
1475 S. Bascom Ave, Suite 204
Campbell, California 95008
408.371.8200 Fx 408.371.8201

ACIES ENGINEERING
3371 Olcott Street
Santa Clara, CA 95054
ph: (408) 522-5255
fx: (408) 522-5260
info@acies.net
Copyright © 2019

REGISTERED PROFESSIONAL ENGINEER — No.E15130 — 06/30/20 — ELECTRICAL — STATE OF CALIFORNIA

TITLE 24 FORMS – INDOOR LIGHTING
PART 1 (ENG. BLDG REMODELING)

TOWN OF LOS GATOS
ENGINEERING BUILDING TI AND STORAGE BUILDING
41 MILES AVENUE,
LOS GATOS, CA 95030

REVISIONS

NO.	ITEM	DATE
1	RESPONSE TO FIRST REVIEW COMMENTS	6/4/20

PERMIT #:
SUBMITTAL:
CITY SUBMITTAL SET
DRAWN BY:
CHECKED BY:
JOB NO: 1826 — DATE: 12/04/19
SHEET NO.
E0.4A

7/23/2020 2:33 PM

STATE OF CALIFORNIA

INDOOR LIGHTING - LIGHTING CONTROLS

CEC-NRCC-LTI-02-E (Revised 01/16) CALIFORNIA ENERGY COMMISSION

CERTIFICATE OF COMPLIANCE	NRCC-LTI-02-E
Indoor Lighting - Lighting Controls	(Page 1 of 3)
Project Name: **TOWN OF LOS GATOS ENGINEERING BUILDING TI**	Date Prepared: **7/23/2020**

The NRCC-LTI-02-E shall be used to document all mandatory and prescriptive lighting controls that are applicable to the project.

A. Mandatory Lighting Control Declaration Statements (Indicate if the measure applies by checking yes or no below.)

YES	NO	Control Requirements
☑	☐	Lighting shall be controlled by self-contained lighting control devices which are certified to the Energy Commission according to the Title 20 Appliance Efficiency Regulations in accordance with Section 110.9.
☑	☐	Lighting shall be controlled by a lighting control a system or energy management control system in accordance with §110.9. An Installation Certificate shall be submitted in accordance with Section 130.4(b).
☑	☐	One or more Track Lighting Integral Current Limiters shall be installed which have been certified to the Energy Commission in accordance with §110.9 and §130.0. Additionally, an Installation Certificate shall be submitted in accordance with Section 130.4(b).
☑	☐	A Track Lighting Supplementary Overcurrent Protection Panel shall be installed in accordance with Section 110.9 and Section 130.0. Additionally, an Installation Certificate shall be installed in accordance with Section 130.4(b).
☑	☐	All lighting controls and equipment shall comply with the applicable requirements in §110.9 and shall be installed in accordance with the manufacturer's instructions in accordance with Section 130.1.
☑	☐	All luminaires shall be functionally controlled with manually switched ON and OFF lighting controls in accordance with Section 130.1(a).
☑	☐	General lighting shall be separately controlled from all other lighting systems in an area. Floor and wall display, window display, case display, ornamental, and special effects lighting shall each be separately controlled on circuits that are 20 amps or less. When track lighting is used, general, display, ornamental, and special effects lighting shall each be separately controlled; in accordance with Section 130.1(a)4.
☑	☐	The general lighting of any enclosed area 100 square feet or larger, with a connected lighting load that exceeds 0.5 watts per square foot shall meet the multi-level lighting control requirements in accordance with Section 130.1(b).
☑	☐	All installed indoor lighting shall be equipped with controls that meet the applicable Shut-OFF control requirements in Section 130.1(c).
☑	☐	Lighting in all Daylit Zones shall be controlled in accordance with the requirements in Section 130.1(d) and daylit zones are shown on the plans.
☐	☑	Lighting power in buildings larger than 10,000 square feet shall be capable of being automatically reduced in response to a Demand Responsive Signal in accordance with Section 130.1(e).
☑	☐	Before an occupancy permit is granted for a newly constructed building or area, or a new lighting system serving a building, area, or site is operated for normal use, indoor lighting controls serving the building, area, or site shall be certified as meeting the Acceptance Requirements for Code Compliance in accordance with Section 130.4.(a). The controls required to meet the Acceptance Requirements include automatic daylight controls, automatic shut-OFF controls, and demand responsive controls.

STATE OF CALIFORNIA

INDOOR LIGHTING - LIGHTING CONTROLS

CEC-NRCC-LTI-02-E (Revised 01/16) CALIFORNIA ENERGY COMMISSIO

CERTIFICATE OF COMPLIANCE	NRCC-LTI-02-E
Indoor Lighting - Lighting Controls	(Page 2 of 3)
Project Name: **TOWN OF LOS GATOS ENGINEERING BUILDING TI**	Date Prepared: **7/23/2020**

A separate document must be filled out for Conditioned and Unconditioned Spaces. This page is used only for the following:

☑ CONDITIONED SPACES ☐ UNCONDITIONED SPACES

B. MANDATORY AND PRESCRIPTIVE INDOOR LIGHTING CONTROL SCHEDULE, PAF CALCULATION, and FIELD INSPECTION CHECKLIST

Lighting Control Schedule			Standards Complying With[1] (☐ all that apply, or enter 'E' if Exempted)							PAF Credit Calculation[2] Watts of Controlled Lighting	PAF	Control Credit (11 x 12)	☐ if Acceptance Test Required	Field Inspector	
01	02	03	04	05	06	07	08	09	10	11	12	13	14	15	
Location in Building	Type/ Description of Lighting Control (i.e.: occupancy sensor, automatic time switch, dimmer, automatic daylight, etc...)	# of Units	§130.1(a)	§130.0(b)	§130.1(c)	§130.1(d)	§130.1(e)	§140.6(a)2	§140.6(d)					Pass	Fail
MAINTEN. OFFICES (SUMMARY)	DIMMER & "OS"	2 & 2	☑	☑	☑	☐	☐	☐	☐			0	☑	☐	☐
MAINTEN. OPEN OFFICE	DIMMER & "OS"	2 & 2	☑	☑	☑	☐	☐	☐	☐			0	☑	☐	☐
UNISEX RESTROOM (SUMMARY)	DIMMER & "OS"	1 & 1	☑	☑	☑	☐	☐	☐	☐			0	☑	☐	☐
STORAGE	SWITCH WITH OS	1	☑	☐	☑	☐	☐	☐	☐			0	☑	☐	☐
HALLWAY (SUMMARY)	DIMMER & "OS"	2 & 1	☑	☑	☑	☐	☐	☐	☐			0	☑	☐	☐
RECEPTION / LOBBY	DIMMER & "OS"	2 & 1	☑	☑	☑	☐	☐	☐	☐			0	☑	☐	☐
MAIN CONFERENCE ROOM	DIMMER & "OS"	2 & 1	☑	☑	☑	☐	☐	☐	☐			0	☑	☐	☐
SMALL CONFERENCE ROOM	DIMMER & "OS"	1 & 1	☑	☑	☑	☐	☐	☐	☐			0	☑	☐	☐
KITCHEN / BREAK	DIMMER & "OS"	1 & 1	☑	☑	☑	☐	☐	☐	☐			0	☑	☐	☐
OPEN OFFICE	DIMMER & "DS"	4 & 2	☑	☑	☑	☑	☐	☐	☐			0	☑	☐	☐
TRAFFIC	DIMMER & "OS"	1 & 1	☑	☑	☑	☐	☐	☐	☐			0	☑	☐	☐
OFFICES (SUMMARY)	DIMMER & "OS"	1 & 1	☑	☑	☑	☐	☐	☐	☐			0	☐	☐	☐
			☐	☐	☐	☐	☐	☐	☐			0	☐	☐	☐
			☐	☐	☐	☐	☐	☐	☐			0	☐	☐	☐
			☐	☐	☐	☐	☐	☐	☐			0	☐	☐	☐
Control Credit PAGE TOTAL (Sum of Column M):												0			
IF MULTIPLE PAGES ARE USED, ENTER SUM TOTAL OF Control Credit for all pages HERE (Sum of all Column M):												0			
												Enter Control Credit total into NRCC-LTI-01-E; Page 1.			

1. §130.1(a) = Manual area controls; §130.0(b) = Multi Level; §130.1(c) = Auto Shut-Off; §130.1(d) = Mandatory Daylight; §130.1(e) = Demand Responsive; §140.6(d) = Additional lighting controls installed to earn a PAF; §140.6(d) = Prescriptive Secondary Sidelit Daylight Controls.

2. Check Table 140.6-A for correct Factor. PAFs shall not be traded between conditioned and unconditioned spaces. As a condition to earn a PAF, an Installation Certificate is also required to be filled out, signed, and submitted.

STATE OF CALIFORNIA

INDOOR LIGHTING - LIGHTING CONTROLS

CEC-NRCC-LTI-02-E (Revised 01/16) CALIFORNIA ENERGY COMMISSION

CERTIFICATE OF COMPLIANCE	NRCC-LTI-02-E
Indoor Lighting - Lighting Controls	(Page 3 of 3)
Project Name: **TOWN OF LOS GATOS ENGINEERING BUILDING TI**	Date Prepared: **7/23/2020**

DOCUMENTATION AUTHOR'S DECLARATION STATEMENT

1. I certify that this Certificate of Compliance documentation is accurate and complete.

Documentation Author Name: **TOMISLAV GAJIC**	Documentation Author Signature:
Company: **ACIES ENGINEERING**	Signature Date: **7/23/2020**
Address: **3371 Olcott Street**	CEA Certification Identification (if applicable):
City/State/Zip: **Santa Clara, CA 95054**	Phone: **(408) 522-5255**

RESPONSIBLE PERSON'S DECLARATION STATEMENT

I certify the following under penalty of perjury, under the laws of the State of California:

1. The information provided on this Certificate of Compliance is true and correct.
2. I am eligible under Division 3 of the Business and Professions Code to accept responsibility for the building design or system design identified on this Certificate of Compliance (responsible designer).
3. The energy features and performance specifications, materials, components, and manufactured devices for the building design or system design identified on this Certificate of Compliance conform to the requirements of Title 24, Part 1 and Part 6 of the California Code of Regulations.
4. The building design features or system design features identified on this Certificate of Compliance are consistent with the information provided on other applicable compliance documents, worksheets, calculations, plans and specifications submitted to the enforcement agency for approval with this building permit application.
5. I will ensure that a completed signed copy of this Certificate of Compliance shall be made available with the building permit(s) issued for the building, and made available to the enforcement agency for all applicable inspections. I understand that a completed signed copy of this Certificate of Compliance is required to be included with the documentation the builder provides to the building owner at occupancy.

Responsible Designer Name: **TOMISLAV GAJIC**	Responsible Designer Signature:
Company : **ACIES ENGINEERING**	Date Signed: **7/23/2020**
Address: **3371 Olcott Street**	License: **E15130**
City/State/Zip: **Santa Clara, CA 95054**	Phone: **(408) 522-5255**

Cuschieri Horton Architects
1475 S. Bascom Ave, Suite 204
Campbell, California 95008
408.371.8200 Fx 408.371.8201

ACIES ENGINEERING
3371 Olcott Street
Santa Clara, CA 95054
ph: (408) 522-5255
fx: (408) 522-5260
info@acies.net

Copyright © 2019

REGISTERED PROFESSIONAL ENGINEER TOMISLAV Z. GAJIC No.E15130 Exp.06/30/20 ELECTRICAL STATE OF CALIFORNIA

TITLE 24 FORMS – INDOOR LIGHTING PART 2 (ENG. BLDG REMODELING)

TOWN OF LOS GATOS
ENGINEERING BUILDING TI AND STORAGE BUILDING
41 MILES AVENUE,
LOS GATOS, CA 95030

REVISIONS

NO.	ITEM	DATE
1	RESPONSE TO FIRST REVIEW COMMENTS	6/4/20

PERMIT #:

SUBMITTAL: CITY SUBMITTAL SET

DRAWN BY:

CHECKED BY:

JOB NO: 1826 DATE: 12/04/19

SHEET NO. E0.4B

7/23/2020 2:33 PM

STATE OF CALIFORNIA

INDOOR LIGHTING - POWER ALLOWANCE

CEC-NRCC-LTI-03-E (Revised 01/16) CALIFORNIA ENERGY COMMISSION

CERTIFICATE OF COMPLIANCE	NRCC-LTI-03-E
Certificate of Compliance - Indoor Lighting Power Allowance	(Page 1 of 4)
Project Name: **TOWN OF LOS GATOS ENGINEERING BUILDING TI**	Date Prepared: **7/23/2020**

ALLOWED LIGHTING POWER

A separate page must be filled out for Conditioned and Unconditioned Spaces. This page is only for:

☑ CONDITIONED spaces ☐ UNCONDITIONED spaces

A. SUMMARY TOTALS OF LIGHTING POWER ALLOWANCES

- If using Complete Building Method for compliance, use only the total in column (a) as total allowed building watts.
- If using Area Category Method, Tailored Method, or a combination of Area Category and Tailored Method for compliance, use only the total in column (b) as the total allowed building watts

	(a)	(b)
01. Complete Building Method Allowed Watts. Documented in section B of NRCC-LTI-03-E (below on this page)		0
02. Area Category Method Allowed Watts. Documented in section C-1 of NRCC-LTI-03-E (below on this page)		2282.395
03. Tailored Method Allowed Watts. Documented in section A of NRCC-LTI-04-E		0
TOTAL ALLOWED BUILDING WATTS. Enter number into correct cell on NRCC-LTI-01, Page 2, Row 1	0	2282.395

☑ Check here if building contains both conditioned and unconditioned areas.

B. COMPLETE BUILDING METHOD LIGHTING POWER ALLOWANCE

01	02		03		04
TYPE OF BUILDING (From §140.6 Table 140.6-B)	**WATTS PER (ft^2)**	**X**	**COMPLETE BLDG. AREA**	=	**ALLOWED WATTS**
					0
			Total Area:		0
Total Watts. Enter Total Watts into section A, row 1 (Above on this page)					0

C -1 AREA CATEGORY METHOD TOTAL LIGHTING POWER ALLOWANCES (D plus E)

	Watts
Total from section C-2 .	2282.395
Total from section C-3 .	0
Total Watts. Enter Total Watts into section A, row 2 (Above on this page) .	2282.395
For Alterations Only - Reduced lighting power options (Total Allowed Watts x 0.85). Enter this value into section A, row 2 if using this options.	

STATE OF CALIFORNIA

INDOOR LIGHTING - POWER ALLOWANCE

CEC-NRCC-LTI-03-E (Revised 01/16) CALIFORNIA ENERGY COMMISSION

CERTIFICATE OF COMPLIANCE	NRCC-LTI-03-E
Certificate of Compliance - Indoor Lighting Power Allowance	(Page 2 of 4)
Project Name: **TOWN OF LOS GATOS ENGINEERING BUILDING TI**	Date Prepared: **7/23/2020**

A separate page must be filled out for Conditioned and Unconditioned Spaces. This page is only for:

☑ CONDITIONED spaces ☐ UNCONDITIONED spaces

C-2 AREA CATEGORY METHOD GENERAL LIGHTING POWER ALLOWANCE

- Do not include portable lighting for offices. Portable lighting for offices shall be documented only in section B of NRCC-LTI-01-E.
- Separately list lighting for each primary function area as defined in §100.1 of the Standards.

01		02		03		04
AREA CATEGORY (From §140.6 Table 140.6-C)		**WATTS**				**ALLOWED**
Location in Building	**Primary Function Area per Table 140.6-C**	**PER ft^2**	x	**AREA (ft2)**	=	**WATTS**
MAINTENANCE OFFICE (SUMMARY)	OFFICE AREA (≤ 250 SQ. FEET)	1.00		174.3		**174.3**
MAINTENANCE OPEN OFFICE	OFFICE AREA (> 250 SQ. FEET)	0.75		326		**244.5**
UNISEX RESTROOM (SUMMARY)	RESTROOM AREA	0.60		115.8		**69.48**
STORAGE	STORAGE AREAS	0.60		41.3		**24.78**
HALLWAY (SUMMARY)	CORRIDOR AREA	0.60		152.8		**91.68**
RECEPTION / LOBBY	MAIN ENTRY LOBBY	0.95		286.1		**271.795**
MAIN CONFERENCE ROOM	CONFERENCE AREA	1.20		222		**266.4**
SMALL CONFERENCE ROOM	CONFERENCE AREA	1.20		93.6		**112.32**
KITCHEN / BREAK	KITCHEN AREA	1.20		110.7		**132.84**
OPEN OFFICE	OFFICE AREA (> 250 SQ. FEET)	0.75		830.8		**623.1**
TRAFFIC, OFFICE (SUMMARY)	OFFICE AREA (≤ 250 SQ. FEET)	1.00		271.2		**271.2**
						0
						0
						0
						0
						0
						0
						0
						0
						0
			TOTALS	**2624.6**		**2282.395**
Enter sum total Area Category allowed watts into section C-1 of NRCC-LTI-03-E (this compliance form)						**2282.395**
						WATTS

STATE OF CALIFORNIA

INDOOR LIGHTING - POWER ALLOWANCE

CEC-NRCC-LTI-03-E (Revised 01/16) CALIFORNIA ENERGY COMMISSION

CERTIFICATE OF COMPLIANCE	NRCC-LTI-03-E
Certificate of Compliance - Indoor Lighting Power Allowance	(Page 3 of 4)
Project Name: **TOWN OF LOS GATOS ENGINEERING BUILDING TI**	Date Prepared: *7/23/2020*

A separate page must be filled out for Conditioned and Unconditioned Spaces. This page is only for:

☑ CONDITIONED spaces ☐ UNCONDITIONED spaces

C-3 AREA CATEGORY METHOD ADDITIONAL LIGHTING WATTAGE ALLOWANCE (from Table 140.6-C Footnotes)

01	02	03[2]	04	05	06	07
Primary Function	Sq Ft or linear ft[1]	Additional Watts Allowed	Wattage Allowance (02 x 03)	Description(s) and Quantity of Special Luminaire Types in each Primary Function Area	Total Design Watts[3]	ALLOWED WATTS Smaller of 04 or 06
			0			**0**
			0			**0**
			0			**0**
			0			**0**
			0			**0**
			0			**0**
			0			**0**
			0			**0**
			0			**0**
			0			**0**
			0			**0**
			0			**0**
			0			**0**
			0			**0**
			0			**0**
			0			**0**
			0			**0**
			0			**0**
TOTALS – Enter into TOTAL AREA CATEGORY METHOD ADDITIONAL ALLOWANCES – Section C-1 .						**0**

1. Use linear feet only for additional allowance for white board or chalk board. All other additional Area Category allowances shall use watts per square foot.
2 . Additional watts are available only when allowed according to the footnotes on bottom of Table 146-C, which include: Specialized task work; Ornamental lighting; Precision commercial and industrial work; Per linear foot of white board or chalk board; Accent, display and feature lighting; and Videoconferencing Studio lighting..
3. Luminaire classification and wattage shall be determined in accordance with §130.0(c) of the Standards.

STATE OF CALIFORNIA

INDOOR LIGHTING - POWER ALLOWANCE

CEC-NRCC-LTI-03-E (Revised 01/16) CALIFORNIA ENERGY COMMISSION

CERTIFICATE OF COMPLIANCE	NRCC-LTI-03-E
Certificate of Compliance - Indoor Lighting Power Allowance	(Page 4 of 4)
Project Name: TOWN OF LOS GATOS ENGINEERING BUILDING TI	Date Prepared: 7/23/2020

DOCUMENTATION AUTHOR'S DECLARATION STATEMENT

1. I certify that this Certificate of Compliance documentation is accurate and complete.

Documentation Author Name: **TOMISLAV GAJIC**	Documentation Author Signature:
Company: **ACIES ENGINEERING**	Signature Date: **7/23/2020**
Address: **3371 Olcott Street**	CEA Certification Identification (if applicable):
City/State/Zip: **Santa Clara, CA 95054**	Phone: **(408) 522-5255**

RESPONSIBLE PERSON'S DECLARATION STATEMENT

I certify the following under penalty of perjury, under the laws of the State of California:

1. The information provided on this Certificate of Compliance is true and correct.
2. I am eligible under Division 3 of the Business and Professions Code to accept responsibility for the building design or system design identified on this Certificate of Compliance (responsible designer).
3. The energy features and performance specifications, materials, components, and manufactured devices for the building design or system design identified on this Certificate of Compliance conform to the requirements of Title 24, Part 1 and Part 6 of the California Code of Regulations.
4. The building design features or system design features identified on this Certificate of Compliance are consistent with the information provided on other applicable compliance documents, worksheets, calculations, plans and specifications submitted to the enforcement agency for approval with this building permit application.
5. I will ensure that a completed signed copy of this Certificate of Compliance shall be made available with the building permit(s) issued for the building, and made available to the enforcement agency for all applicable inspections. I understand that a completed signed copy of this Certificate of Compliance is required to be included with the documentation the builder provides to the building owner at occupancy.

Responsible Designer Name: **TOMISLAV GAJIC**	Responsible Designer Signature:
Company : **ACIES ENGINEERING**	Date Signed: **7/23/2020**
Address: **3371 Olcott Street**	License: **E15130**
City/State/Zip: **Santa Clara, CA 95054**	Phone: **(408) 522-5255**

Cuschieri Horton Architects
1475 S. Bascom Ave, Suite 204
Campbell, California 95008
408.371.8200 Fx 408.371.8201

ACIES ENGINEERING
3371 Olcott Street
Santa Clara, CA 95054
ph: (408) 522-5255
fx: (408) 522-5260
info@acies.net

Copyright © 2019

REGISTERED PROFESSIONAL ENGINEER TOMISLAV Z. GAJIC No.E15130 Exp.06/30/20 ELECTRICAL STATE OF CALIFORNIA

TITLE 24 FORMS – INDOOR LIGHTING PART 3 (ENG. BLDG REMODELING)

TOWN OF LOS GATOS
ENGINEERING BUILDING TI AND STORAGE BUILDING
41 MILES AVENUE,
LOS GATOS, CA 95030

REVISIONS

NO.	ITEM	DATE
1	RESPONSE TO FIRST REVIEW COMMENTS	6/4/20

PERMIT #:

SUBMITTAL:
CITY SUBMITTAL SET

DRAWN BY:

CHECKED BY:

JOB NO: 1826 DATE: 12/04/19

SHEET NO.

E0.4C

7/23/2020 2:33 PM

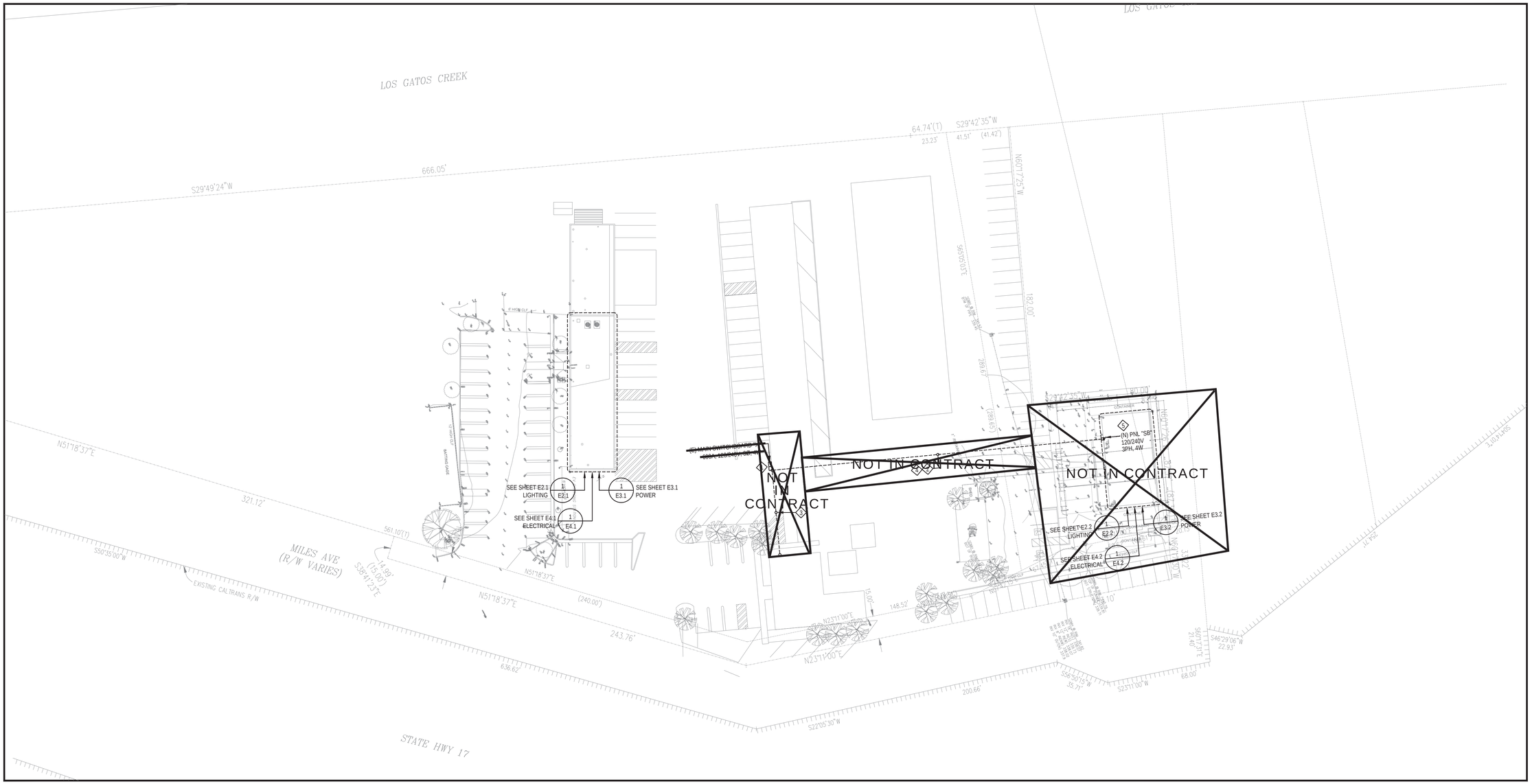

1	SITE PLAN - ELECTRICAL	SCALE: 1/32" = 1'-0"

GENERAL NOTES

#	NOTES
A	GENERAL CONTRACTOR SHALL NOTIFY ARCHITECT IMMEDIATELY IF CONFLICTS OCCUR BETWEEN LIGHTING AND ANY OTHER TRADE. DO NOT PROCEED WITH INSTALLATION IN THAT AREA UNTIL CONFLICT HAS BEEN RESOLVED TO THE SATISFACTION OF THE ARCHITECT AND ENGINEER.
B	WHERE WIRE SIZES ARE NOTED ON DRAWINGS, THAT SIZE SHALL BE THROUGH THE ENTIRE RUN UNLESS NOTED OTHERWISE.
C	THE PRESENTED UNDERGROUND CONDUITS ROUTES ARE FOR REFERENCE ONLY. ELECTRICAL CONTRACTOR SHALL COORDINATE WITH OTHER ON-SITE UTILITIES FOR EXACT ROUTING AND POINT OF CONNECTIONS FOR ALL ELECTRICAL UTILITIES. THIS WORK IS SHOWN FOR REFERENCE ONLY, REFER TO DESIGN DRAWINGS BY RGA FOR DETAILED DESIGN OF THIS WORK.
D	ELECTRICAL CONTRACTOR SHALL MAKE ALL FINAL CONNECTIONS AS REQUIRED FOR A FULLY COMPLETE AND OPERABLE SYSTEM.
E	IF NON-METALIC CONDUIT IS BEING USED AN EQUIPMENT GROUND MUST BE INSTALLED.
F	ALL EMPTY UNDERGROUND CONDUITS SHALL BE PVC SCH 40, 1" MINIMUM, UNLESS OTHER NOTED, AND SHALL BE INSTALLED WITH PULLWIRE.
G	ELECTRICAL CONTRACTOR TO FIELD VERIFY ALL CONDITIONS PRIOR TO BID.
H	REFER TO BUILDING GUIDANCE STANDARDS FOR MATERIAL SELECTION CRITERIA, FINISHES AND GENERAL WORK RULES.

SHEET NOTES

NUMBER	NOTES
1	MAINTAIN 36" CLEARANCE IN FRONT OF 240V EQUIPMENT, 30" MIN. CLEAR WIDTH.
2	PROVIDE (4)2" CONDUITS, ONE FOR POWER AND (3)2" CONDUITS FOR LOW VOLTAGE SYSTEMS (PHONE, DATA, SECURITY, FIRE ALARM).
3	PROVIDE (3)2" CONDUITS WITH PULLWIRE FOR LOW VOLTAGE SYSTEMS.
4	ELECTRIC LINE TO BE PULLED FROM NEW PANEL ATTACHED TO EXISTING METER.
5	NEW PANEL TO BE INSTALLED AS PART OF THE PROJECT.

Cuschieri Horton Architects
1475 S. Bascom Ave, Suite 204
Campbell, California 95008
408.371.8200 Fx 408.371.8201

ACIES ENGINEERING
3371 Olcott Street
Santa Clara, CA 95054
ph: (408) 522-5255
fx: (408) 522-5260
info@acies.net

Copyright © 2019

REGISTERED PROFESSIONAL ENGINEER
NAE15130
06/30/20
ELECTRICAL
STATE OF CALIFORNIA

OVERALL SITE PLAN – ELECTRICAL

TOWN OF LOS GATOS
ENGINEERING BUILDING TI ~~AND STORAGE BUILDING~~
41 MILES AVENUE,
LOS GATOS, CA 95030

REVISIONS

NO.	ITEM	DATE
1	RESPONSE TO FIRST REVIEW COMMENTS	6/4/20

PERMIT #:

SUBMITTAL:
CITY SUBMITTAL SET

DRAWN BY:

CHECKED BY:

JOB NO: 1826
DATE: 12/04/19

SHEET NO.
E1.0

7/23/2020 2:35 PM

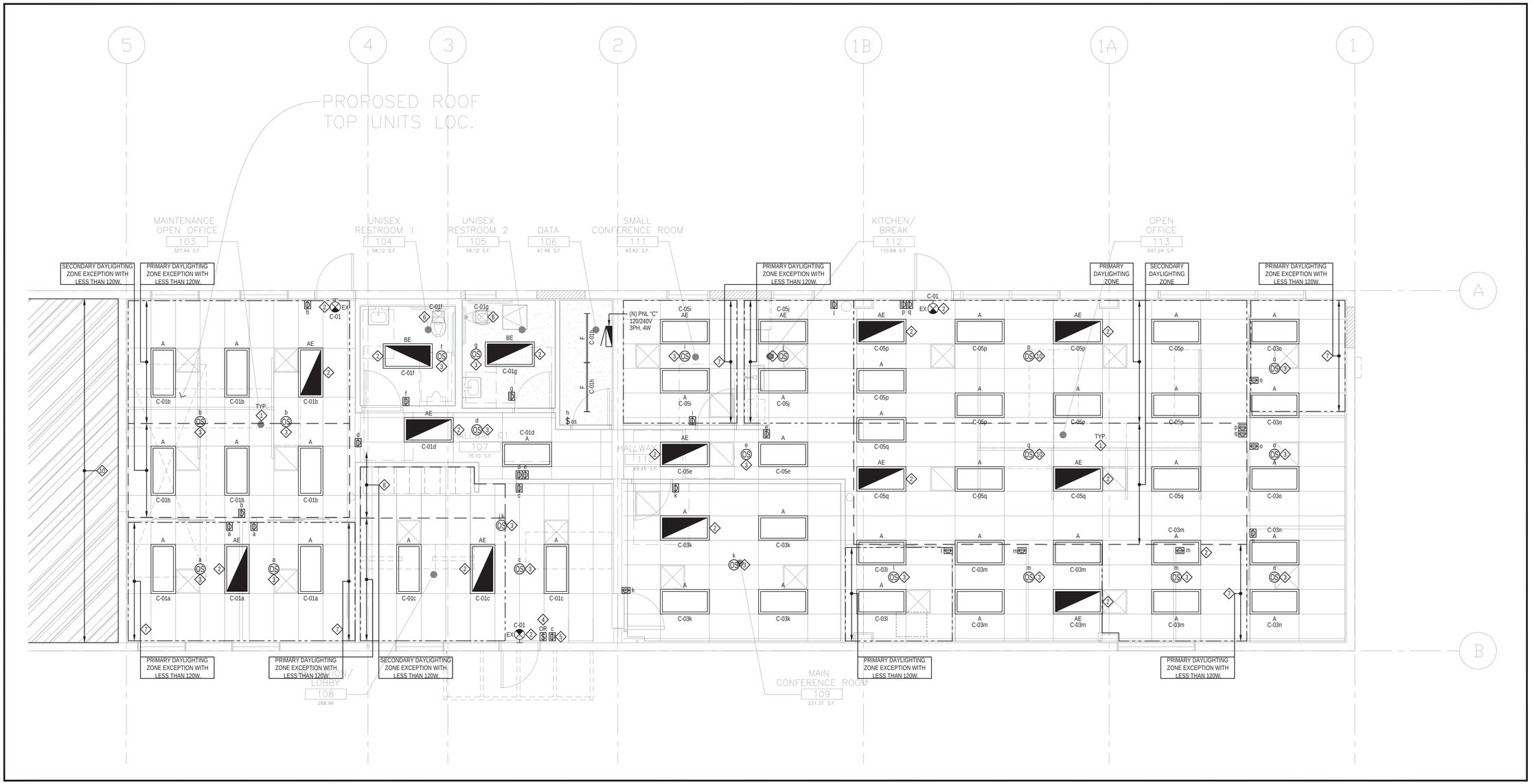

1	CEILING RCP PLAN - LIGHTING	SCALE: 1/4" = 1'-0"

GENERAL NOTES

CODE	NOTES
A	GENERAL CONTRACTOR SHALL NOTIFY ARCHITECT IMMEDIATELY IF CONFLICTS OCCUR BETWEEN LIGHTING AND ANY OTHER TRADE. DO NOT PROCEED WITH INSTALLATION IN THAT AREA UNTIL CONFLICT HAS BEEN RESOLVED TO THE SATISFACTION OF THE ARCHITECT AND ENGINEER.
B	REFER TO ARCHITECTURAL DRAWINGS FOR EXACT LOCATIONS AND MOUNTING INSTRUCTIONS FOR ALL LIGHT FIXTURES. ELECTRICAL CONTRACTOR'S BID SHALL INCLUDE THE INSTALLATION OF ALL LIGHT FIXTURES AND ASSOCIATED LAMPS INCLUDING ALL NECESSARY HARDWARE AND SUPPORT PER SEISMIC REQUIREMENTS.
C	ALL WIRES SHALL BE #12 AWG UNLESS NOTED OTHERWISE. PROVIDE SEPARATE NEUTRAL WIRE FOR ALL LIGHTING CIRCUITS BACK TO LIGHTING CONTROL PANEL.
D	WHERE WIRE SIZES ARE NOTED ON DRAWINGS, THAT SIZE SHALL BE THROUGH THE ENTIRE RUN UNLESS NOTED OTHERWISE.
E	ALL EMERGENCY LIGHT FIXTURES SHALL BE SERVED FROM BATTERY BACKUP. EMERGENCY AND EXIT LIGHTS SHALL BE INSTALLED AND CIRCUITED PER THE LATEST NATIONAL ELECTRICAL CODE AND ALL LOCAL CODES. (INSTALL A CENTRAL BATTERY SYSTEM WHERE THE USE OF INDIVIDUAL BATTERY UNITS ARE PROHIBITED BY LOCAL CODES.). ALL EMERGENCY FIXTURES AND EXIT SIGNS SHALL BE CONNECTED TO UNSWITCHED HOT LEG OF THE LOCAL LIGHTING CIRCUIT.
F	ALL LIGHT FIXTURES INSTALLED OVER UTENSIL WASHING AREA, FOOD HANDLING OR FOOD PREPARATION AREAS OR OPEN FOOD STORAGE AREAS SHALL BE OF SHATTERPROOF CONSTRUCTION OR SHALL BE PROTECTED WITH SHATTERPROOF SHIELDS AND SHALL BE READILY CLEANABLE.
G	ELECTRICAL CONTRACTOR SHALL MAKE ALL FINAL CONNECTIONS AS REQUIRED FOR A FULLY COMPLETE AND OPERABLE SYSTEM.
H	ELECTRICAL CONTRACTOR TO FIELD VERIFY ALL CONDITIONS PRIOR TO BID.
I	REFER TO BUILDING GUIDANCE STANDARDS FOR MATERIAL SELECTION CRITERIA, FINISHES AND GENERAL WORK RULES.

SHEET NOTES

NUMBER	NOTES
1	AT THIS AREA REUSE EXISTING LIGHTING CIRCUITS. FIELD VERIFY EXACT LOCATION, REQUIREMENTS AND CONDITION. IF NEEDED MAKE ALL NECESSARY MODIFICATIONS FOR COMPLIANCE WITH NEW TITLE 24 AND CALIFORNIA ENERGY COMMISSION (CEC) CERTIFICATION. PROVIDE ALL ADDITIONAL CONTROL WIRING DUE TO LIGHTING CONTROL UPGRADE. COORDINATE WITH LIGHTING CONTROL SUPPLIER AND ELECTRICAL CONTRACTOR ALL REQUIREMENTS PRIOR ANY WORK OR BID. INCLUDE ALL NECESSARY CABLING, PARTS AND ACCESSORIES TO ALLOW FULL WORKING ORDER OF THE LIGHTING FIXTURES.
2	EXIT/EMERGENCY LIGHT FIXTURE WITH BATTERY PACK. EMERGENCY BATTERY PACK SHALL BE CONNECTED TO LOCAL LIGHTING CIRCUIT AHEAD OF ALL SWITCHES.
3	PROVIDE WIRELESS OCCUPANCY / VACANCY SENSOR SWITCH FOR LIGHT CONTROLS.
4	LOW-VOLTAGE BY-PASS SWITCH FOR INTERIOR LIGHTING OVERRIDE. MAXIMUM OVERRIDE TIME 120MIN, AS PER TITLE 24. PROVIDE ENGRAVED LABEL. SWITCH SHALL BE PROGRAMMED TO OVERRIDE ONLY THE LIGHTS THAT ARE IN THE SIGHT FROM THE SWITCH LOCATION.
5	DIMMING BANK. PROVIDE MANUAL DIMMERS FOR INDICATED CIRCUIT. DIMMER RATING TO MATCH SERVING LOAD TYPE AND RATING. IF DIMMERS ARE GANGED TOGETHER DO NOT BREAK FINS. IF FINS ARE BROKEN, APPLY DERATING FACTOR.
6	CEILING MOUNTED RESTROOM EXHAUST FAN TO BE CONTROLLED BY LIGHT SWITCH. COORDINATE EXACT LOCATION WITH MECHANICAL CONTRACTOR.
7	PRIMARY DAYLIGHTING ZONE EXCEPTION WITH LESS THAN 120W.
8	SECONDARY DAYLIGHTING ZONE EXCEPTION WITH LESS THAN 120W.
9	PROVIDE DAYLIGHT SENSOR FOR DAYLIGHT CONTROLS AS REQUIRED BY TITLE 24.
10	NOT IN SCOPE.

Cuschieri Horton Architects
1475 S. Bascom Ave, Suite 204
Campbell, California 95008
408.371.8200 Fx 408.371.8201

ACIES ENGINEERING
3371 Olcott Street
Santa Clara, CA 95054
ph: (408) 522-5255
fx: (408) 522-5260
info@acies.net

Copyright © 2019

REGISTERED PROFESSIONAL ENGINEER
Nick E 15130
06/30/20
ELECTRICAL
STATE OF CALIFORNIA

CEILING RCP PLAN – LIGHTING (ENGINEERING BUILDING REMODELING)

TOWN OF LOS GATOS
ENGINEERING BUILDING TI ~~AND STORAGE BUILDING~~
41 MILES AVENUE,
LOS GATOS, CA 95030

REVISIONS

NO.	ITEM	DATE
1	RESPONSE TO FIRST REVIEW COMMENTS	6/4/20

PERMIT #:

SUBMITTAL:
CITY SUBMITTAL SET

DRAWN BY:
CHECKED BY:

JOB NO: 1826
DATE: 12/04/19

SHEET NO.
E2.1

7/23/2020 2:35 PM

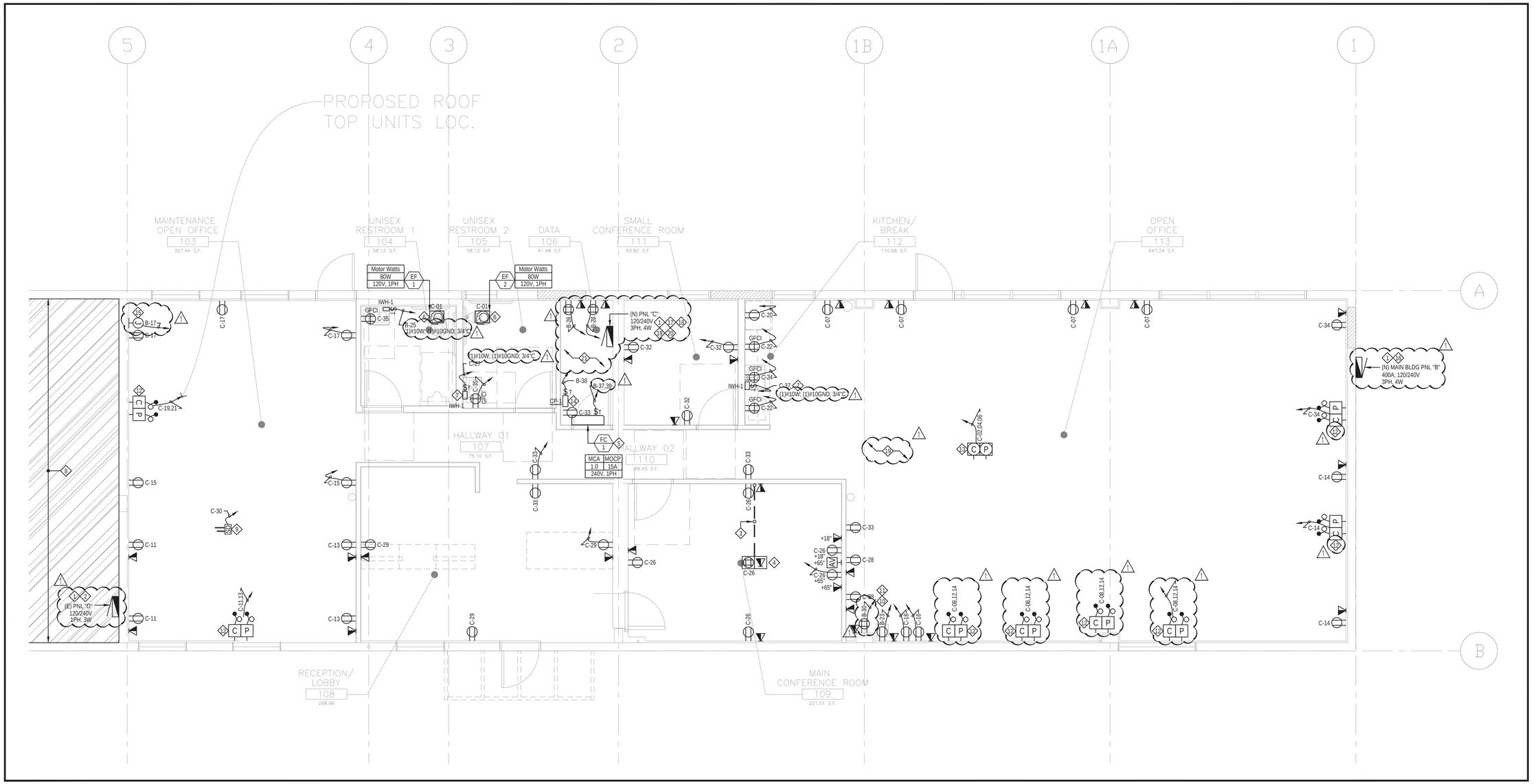

1	FLOOR PLAN - POWER	SCALE: 1/4" = 1'-0"

GENERAL NOTES

CODE	NOTES
A	PROVIDE GFCI PROTECTION FOR ALL 120V RECEPTACLES IN KITCHEN AND BAR AREAS.
B	KITCHEN EQUIPMENT POWER/ELECTRICAL INFORMATION ARE BASED ON INFORMATION AVAILABLE FROM KITCHEN DRAWINGS. ELECTRICAL CONTRACTOR SHALL VERIFY RECEPTACLE CONFIGURATIONS AND LOADS WITH KITCHEN VENDOR PRIOR TO ROUGH-IN. REPORT TO ENGINEER OF RECORD AS TO DISCREPANCIES.
C	ALL WIRES SHALL BE #12 AWG UNLESS NOTED OTHERWISE. PROVIDE SEPARATE NEUTRAL WIRE FOR ALL LIGHTING CIRCUITS BACK TO LIGHTING CONTROL PANEL.
D	ALL 120V RUNS LONGER THAN 100' SHALL BE #10 WIRE SIZE UNLESS NOTED OTHERWISE ON PLANS.
E	WHERE WIRE SIZES ARE NOTED ON DRAWINGS, THAT SIZE SHALL BE THROUGH THE ENTIRE RUN UNLESS NOTED OTHERWISE.
F	ELECTRICAL CONTRACTOR SHALL MAKE ALL FINAL CONNECTIONS AS REQUIRED FOR A FULLY COMPLETE AND OPERABLE SYSTEM.
G	ELECTRICAL CONTRACTOR TO FIELD VERIFY ALL CONDITIONS PRIOR TO BID.
H	THE CONTRACTOR SHALL COORDINATE THE EXACT MOUNTING LOCATION OF ALL LIGHT FIXTURES, LIGHT SWITCHES, RECEPTACLES, TELEPHONE/DATA OUTLETS, AND ANY OTHER DEVICE LOCATIONS SHOWN ON THIS PLAN WITH THE ARCHITECTURAL FLOOR PLAN, ARCHITECTURAL REFLECTED CEILING PLAN, AND ARCHITECTURAL INTERIOR ELEVATIONS. DEVICES NOT LOCATED ON THE ARCHITECTURAL DRAWINGS SHALL BE COORDINATED WITH THE ARCHITECT IN THE FORM OF RFI (REQUEST FOR INFORMATION). CONTRACTOR SHALL ASSUME THAT DEVICES ARE TO BE MOUNTED CENTERED ON THE WALLS, SECTION OF WALLS, WINDOWS, ETC. AND THAT ADDITIONAL MOUNTING BRACKETS AND ACCESSORIES SHALL BE A PART OF THE BID PROPOSAL.
I	REFER TO MECHANICAL CONTROLS DIAGRAM FOR ADDITIONAL SCOPE OF WORK, SUCH AS POWER FOR THERMOSTATS, AND OTHER WORK REQUIRED BY ELECTRICAL CONTRACTOR AND NOT SPECIFICALLY MENTIONED IN ELECTRICAL DRAWINGS.
J	REFER TO ARCHITECTURAL DETAILS FOR INSTALLATION OF OUTLETS IN FIRE RATED WALLS.
K	ALL PERMANENTLY CONNECTED (HARD-WIRED) APPLIANCES SHALL BE SERVED WITH DISCONNECTING MEAN WITHIN SIGHT OF THE UNIT, OR THE SERVING CIRCUIT BREAKER IN THE PANEL SHALL BE CAPABLE OF BEING LOCKED IN OPEN POSITION AS REQUIRED PER NEC 422.31.

GENERAL NOTES

CODE	NOTES
M	EACH BRANCH CIRCUIT OF A MULTIWIRE BRANCH CIRCUIT WILL BE SIMULTANEOUSLY DISCONNECTED AT THE POINT WHERE THE BRANCH CIRCUIT ORIGINATES.
N	THE CONTROLLED RECEPTACLE OUTLET MUST BE CLEARLY DIFFERENT FROM UNCONTROLLED RECEPTACLE OUTLET.
N	REFER TO KITCHEN SPECIALIST FOOD SERVICE EQUIPMENT DRAWING FOR EXACT POSITION, LOCATION AND HEIGHT OF OUTLETS.
O	COORDINATE FLOOR CORES LOCATION IN FIELD PRIOR TO ROUGH-IN.
P	ALL UNDER CONDUIT AND PIPING SHALL BE INSTALLED AS NOT TO INTERFERE WITH BUILDING SYSTEMS OR OTHER TENANT REQUIREMENTS.

SHEET NOTES

NUMBER	NOTES
1	MAINTAIN 36" CLEARANCE IN FRONT OF 240V EQUIPMENT, 30" MIN. CLEAR WIDTH.
2	EXISTING ELECTRICAL PANEL TO REMAIN. FIELD VERIFY EXACT LOCATION. PROVIDE UPDATED TYPEWRITTEN SCHEDULE UPON COMPLETION OF THIS PROJECT. SEE PANEL SCHEDULE ON SHEET E0.3.
3	SAWCUT EXISTING CONCRETE SLAB TO PROVIDE NEW CONDUITS FOR POWER (1 1/4") AND DATA (2") PATCH THE FLOOR AFTER INSTALLATION OF CONDUITS TO MATCH ADJACENT FLOOR FINISH.
4	PROVIDE FLOOR OUTLET WITH POWER, DATA AND A/V OUTLETS INSIDE. OUTLET FINAL LOCATION AND TYPE TO BE FIELD COORDINATED WITH ARCHITECT.
5	COORDINATE WITH MECHANICAL DESIGN FOR THE SPLIT SYSTEM "FC-1", EXACT LOCATION AND ELECTRICAL CONNECTIONS.
6	CEILING MOUNTED RESTROOM EXHAUST FAN TO BE CONTROLLED BY LIGHT SWITCH. COORDINATE EXACT LOCATION WITH MECHANICAL CONTRACTOR. SEE SHEET E2.1 FOR DETAILS.
7	PROVIDE CONNECTION WITH DISCONNECT MEANS FOR INSTANTANEOUS WATER HEATER IWH-1. FIELD COORDINATE EXACT LOCATION AND ALL REQUIREMENTS WITH PLUMBING CONTRACTOR.
8	NOT IN SCOPE.

SHEET NOTES

NUMBER	NOTES
9	PROVIDE 120V CONNECTION DEDICATED CIRCUIT FOR THE DUCT SMOKE DETECTOR. COORDINATE WITH MECHANICAL DESIGN FOR THE EXACT LOCATION.
10	PROVIDE NEW STAND ALONE UPS, 240V, 1PH, COMPLETE WITH DUAL INPUT, MAINTENANCE BY-PASS AND BATTERY DISCONNECT. VERIFY FINAL UPS RATING, CONFIGURATION AND LOCATION WITH OWNER AND ELECTRICAL CONTRACTOR PRIOR TO ROUGH-IN OR BID.
11	PROVIDE SURGE SUPPRESSOR DEVICE (SPDS) FOR PROTECTION OF ELECTRICAL EQUIPMENT FROM LIGHTENING AND OTHER ELECTRICAL SURGES. VERIFY FINAL CONFIGURATION AND LOCATION WITH OWNER AND ELECTRICAL CONTRACTOR PRIOR TO ROUGH-IN OR BID.
12	PROVIDE POWER WHIP/TEL/DATA FOR FLEXIBLE CONNECTION TO CUBICLE WALLS AND FURNITURE SYSTEM. COORDINATE EXACT LOCATION AND OTHER REQUIREMENT WITH FURNITURE PLANS. DEVICE TYPE AND STYLE TO BE COORDINATED WITH OWNER, ARCHITECT AND CUBICLE WALLS AND FURNITURE VENDOR/INSTALLER PRIOR TO ANY WORK OR BID.
13	PROVIDE POWER POLE CONNECTION FOR POWER AND COMMUNICATION CABLING (CAT6). COORDINATE FINAL LOCATION, DEVICE TYPE AND STYLE WITH ARCHITECTURAL FURNITURE DESIGN AND VENDOR/INSTALLER. FOR EACH FURNITURE FEED PROVIDE WHIPS AND CONNECTORS COMPATIBLE WITH FURNITURE WIRING SYSTEM. FIELD COORDINATE EXACT LOCATION AND ALL REQUIREMENTS WITH FURNITURE PLANS AND FURNITURE INSTALLER. COORDINATE FINAL FEEDER ROUTING WITH ARCHITECT PRIOR TO ANY WORK.
14	COORDINATE WITH PLUMBING DESIGN FOR THE CONDENSATE PUMP "CP-1", EXACT LOCATION AND ELECTRICAL CONNECTIONS.
15	COORDINATE WITH MECHANICAL DESIGN FOR THE "AUDIO/VISUAL ALARM" FOR ACTIVATION OF DUCT SMOKE DETECTORS , EXACT LOCATION AND ELECTRICAL CONNECTIONS.
16	PROVIDE NEW PANEL "B", NEMA 3R ENCLOSURE. EXTEND EXISTING FEEDER ((2)2" CONDUITS) FROM REMOVED PANEL "B" TO NEW PANEL "B" AND IDENTIFY DISTRIBUTION OF NEW PANEL B THROUGH EXTERIOR BLOCK WALL ABOVE THE CEILING. EXTEND FEEDER (1-1/4" CONDUIT) FROM THE NEW EXTERIOR PANEL TO THE MECHANICS SHOP PANEL "D" FOR FUTURE USE. EXTEND ALL EXISTING FEEDERS THAT WILL REMAIN FROM EXISTING PANEL LOCATION TO NEW PANEL LOCATION. FIELD VERIFY EXACT LOCATION AND OTHER REQUIREMENTS PRIOR ANY WORK OR BID. PROVIDE TYPEWRITTEN SCHEDULE UPON COMPLETION OF THIS PROJECT. SEE PANEL SCHEDULE ON SHEET E0.3A.
17	EXTEND EXISTING FIBER CABLE TO ADJACENT ROOM. SEAL ALL FIRE RATED WALL PENETRATIONS PER CODE.

SHEET NOTES

NUMBER	NOTES
18	PROVIDE NEW ELECTRICAL PANEL INSTEAD OF EXISTING ELECTRICAL PANEL "C". ABANDON IN FLOOR CONDUITS IN PLACE, REMOVE WIRE, AND FEED TO AND DISTRIBUTE FROM NEW PANEL FROM ABOVE. PLACE THE NEW PANEL SURFACE MOUNT ON THE OTHER SIDE OF THE BLOCK WALL INSIDE THE DATA SPACE/STORAGE (106). EXTEND ALL EXISTING CIRCUITING FROM EXISTING TO NEW LOCATION. FIELD VERIFY EXACT LOCATION AND OTHER REQUIREMENTS PRIOR ANY WORK OR BID. PROVIDE TYPEWRITTEN SCHEDULE UPON COMPLETION OF THIS PROJECT. SEE PANEL SCHEDULE ON SHEET E0.3B.
19	ALL DATA WILL BE PULLED TO DATA ROOM (WITH ROOM #) WITH SUFFICIENT SLACK TO TERMINATE ON NORTHERLY WALL. TERMINATION BY OTHERS. ALL DATA CABLES TO BE LABELED AT BOTH ENDS.
20	ALL DISTRIBUTION FROM NEW PANEL "B" TO BE EXPOSED ON EXTERIOR WALL AND ROUTED VERTICALLY UNTIL CONDUITS REACH TOP OF CEILING SPACE INSIDE. PENETRATE THE WALL AND ROUTE CONDUITS INSIDE BUILDING IN THE CEILING SPACE, ABOVE SUSPENDED CEILING. SEAL ALL WALL PENETRATIONS TO MAINTAIN INTEGRITY OF THE WALL.
21	ALL DATA CABLING TO TERMINATE IN DATA ROOM #106. PROVIDE SUFFICIENT CABLE SLACK TO ALLOW FOR THE CONNECTION TO PATCH PANEL RACK.

Cuschieri Horton Architects
1475 S. Bascom Ave, Suite 204
Campbell, California 95008
408.371.8200 Fx 408.371.8201

ACIES ENGINEERING
3371 Olcott Street
Santa Clara, CA 95054
ph: (408) 522-5255
fx: (408) 522-5260
info@acies.net

Copyright © 2019

REGISTERED PROFESSIONAL ENGINEER NAE 15130 06/30/20 ELECTRICAL STATE OF CALIFORNIA

FLOOR PLAN – POWER (ENGINEERING BUILDING REMODELING)

TOWN OF LOS GATOS
ENGINEERING BUILDING TI ~~AND STORAGE BUILDING~~
41 MILES AVENUE,
LOS GATOS, CA 95030

REVISIONS

NO.	ITEM	DATE
1	RESPONSE TO FIRST REVIEW COMMENTS	6/4/20

PERMIT #:

SUBMITTAL:
CITY SUBMITTAL SET
DRAWN BY:
CHECKED BY:
JOB NO: 1826
DATE: 12/04/19

SHEET NO.
E3.1

7/28/2020 5:56 PM

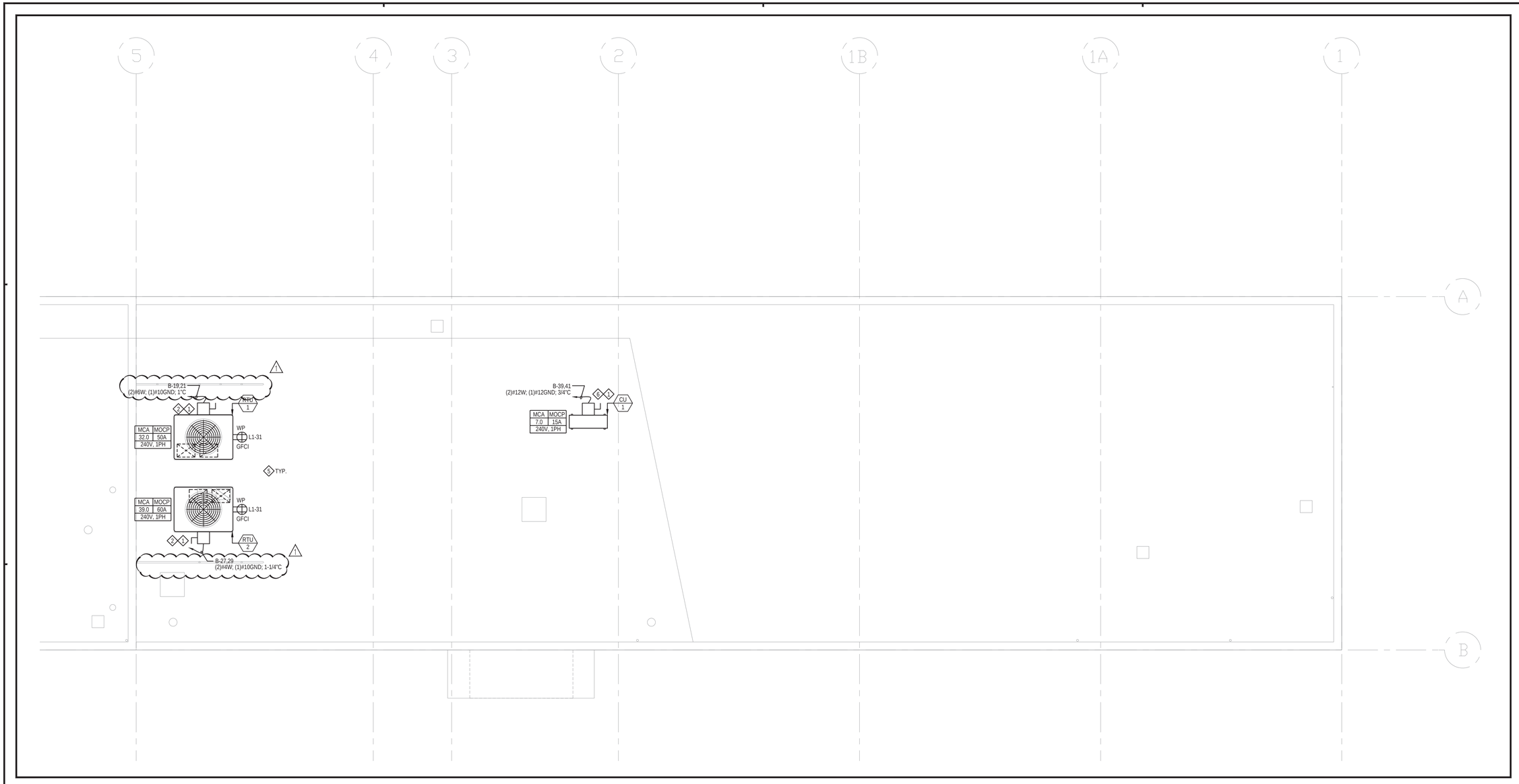

1	FLOOR PLAN - POWER	SCALE: 1/4" = 1'-0"

GENERAL NOTES

CODE	NOTES
A	ELECTRICAL CONTRACTOR SHALL MAKE ALL FINAL CONNECTIONS AS REQUIRED FOR A FULLY COMPLETE AND OPERABLE SYSTEM.
B	ELECTRICAL CONTRACTOR TO FIELD VERIFY ALL CONDITIONS PRIOR TO BID.
C	ALL 120V RUNS LONGER THAN 100' SHALL BE #10 WIRE SIZE UNLESS NOTED OTHERWISE ON PLANS.
D	WHERE WIRE SIZES ARE NOTED ON DRAWINGS, THAT SIZE SHALL BE THROUGH THE ENTIRE RUN UNLESS NOTED OTHERWISE.
E	ELECTRICAL CONTRACTOR SHALL MAKE ALL FINAL CONNECTIONS AS REQUIRED FOR A FULLY COMPLETE AND OPERABLE SYSTEM.
F	ELECTRICAL CONTRACTOR TO FIELD VERIFY ALL CONDITIONS PRIOR TO BID.
G	REFER TO MECHANICAL CONTROLS DIAGRAM FOR ADDITIONAL SCOPE OF WORK, SUCH AS POWER FOR THERMOSTATS, AND OTHER WORK REQUIRED BY ELECTRICAL CONTRACTOR AND NOT SPECIFICALLY MENTIONED IN ELECTRICAL DRAWINGS.
H	ALL UNDER CONDUIT AND PIPING SHALL BE INSTALLED AS NOT TO INTERFERE WITH BUILDING SYSTEMS OR OTHER TENANT REQUIREMENTS.
I	ALL EQUIPMENT INSTALLED OUTDOOR SHALL HAVE NEMA 3R RATED ENCLOSURE.
J	ALL PENETRATIONS THRU THE WALLS/ROOF SHALL BE SEALED PER CODE TO MAINTAIN WALLS/ROOF INTEGRITY.
K	SCREENING REQUIRED TO SHIELD ALL EQUIPMENT ON ROOF.

SHEET NOTES

NUMBER	NOTES
1	EQUIPMENT WITH DISCONNECTING SWITCH. VERIFY FINAL LOCATION AND REQUIREMENTS WITH ELECTRICAL CONTRACTOR & TOOL INSTALLER PRIOR TO ROUGH-IN OR BID.
2	COORDINATE WITH MECHANICAL DESIGN FOR THE ROOF TOP UNIT "RTU", EXACT LOCATION AND ELECTRICAL CONNECTIONS.
3	PROVIDE WEATHERPROOF AND GFCI PROTECTED RECEPTACLES WITHIN 25 FEET OF ROOFTOP EQUIPMENT PER CEC 210.63.
4	IF AT THESE AREA IS NO EXISTING OUTLET CLOSE BY THIS LOCATION, THEN PROVIDE NEW OUTLET AND CONNECT TO THE CIRCUIT AS SHOWN ON PLAN. EXTEND THE EXISTING WIRES AND CONDUITS IF NEEDED. FIELD COORDINATE EXACT LOCATION AND REQUIREMENTS PRIOR ANY WORK OR BID. FINISH TO MATCH ADJACENT SURFACES.
5	ALL OUTDOOR EQUIPMENT SHALL BE NEMA 3R RATED.
6	COORDINATE WITH MECHANICAL DESIGN FOR THE SPLIT SYSTEM "CU-1", EXACT LOCATION AND ELECTRICAL CONNECTIONS.

Cuschieri Horton Architects
1475 S. Bascom Ave, Suite 204
Campbell, California 95008
408.371.8200 Fx 408.371.8201

ACIES ENGINEERING
3371 Olcott Street
Santa Clara, CA 95054
ph: (408) 522-5255
fx: (408) 522-5260
info@acies.net

Copyright © 2019

REGISTERED PROFESSIONAL ENGINEER
NAE15130
06/30/20
ELECTRICAL
STATE OF CALIFORNIA

ROOF FLOOR PLAN – ELECTRICAL (ENGINEERING BUILDING REMODELING)

TOWN OF LOS GATOS
ENGINEERING BUILDING TI ~~AND STORAGE BUILDING~~
41 MILES AVENUE,
LOS GATOS, CA 95030

REVISIONS

NO.	ITEM	DATE
1	RESPONSE TO FIRST REVIEW COMMENTS	6/4/20

PERMIT #:

SUBMITTAL:
CITY SUBMITTAL SET

DRAWN BY:
CHECKED BY:

JOB NO: 1826
DATE: 12/04/19

SHEET NO.
E4.1

7/23/2020 2:35 PM

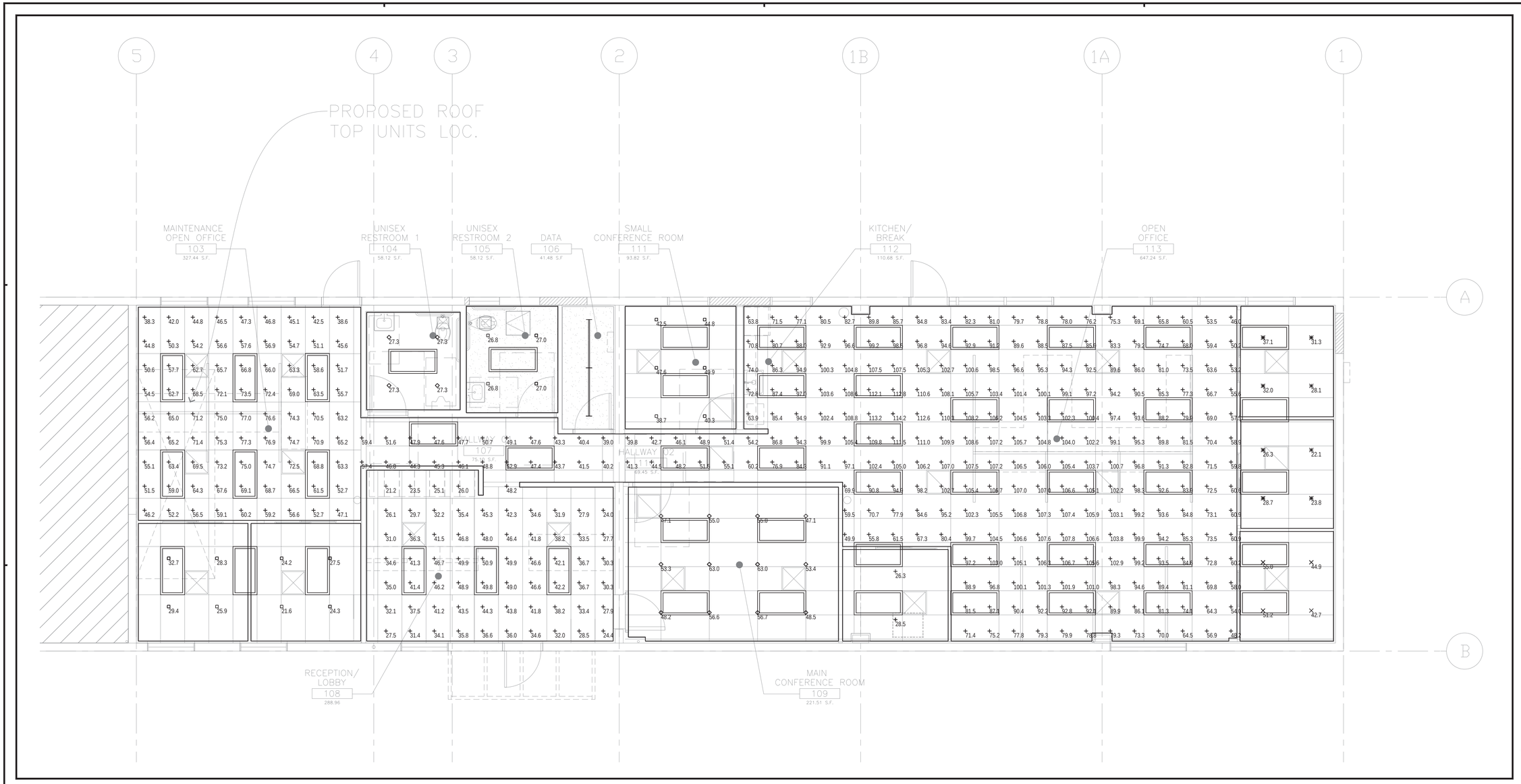

1 CEILING RCP PLAN - PHOTOMETRICS SCALE: 1/4" = 1'-0"

STATISTICS

Description	Symbol	Avg	Max	Min	Max/Min	Avg/Min
Calc Zone #1	+	72.5 fc	114.2 fc	21.2 fc	5.4:1 fc	3.4:1 fc
Calc Zone #2	◇	27.3 fc	27.3 fc	27.3 fc	1.0:1	1.0:1
Calc Zone #3	□	26.9c	26.9 fc	26.8 fc	1.0:1	1.0:1
Calc Zone #4	□	44.0 fc	44.0 fc	38.7 fc	1.3:1	1.1:1
Calc Zone #5	✳	32.1 fc	32.1 fc	28.1 fc	1.3:1	1.1:1
Calc Zone #6	✳	25.2 fc	25.2 fc	22.1 fc	1.3:1	1.1:1
Calc Zone #7	×	48.5 fc	48.5 fc	42.7 fc	1.3:1	1.1:1
Calc Zone #8	+	27.4 fc	27.4 fc	26.3 fc	1.1:1	1.0:1
Calc Zone #9	◇	53.9 fc	53.9 fc	47.1 fc	1.3:1	1.1:1
Calc Zone #10	□	24.4 fc	24.4 fc	21.6 fc	1.3:1	1.1:1
Calc Zone #11	□	29.1 fc	29.1 fc	25.9 fc	1.3:1	1.1:1

LIGHTING FIXTURE SCHEDULE

Type	Symbol	Quantity	Manufacturer / Catalog #	Catalog number	Description	Filename	Lumens Per Lamp	Wattage
A	▭	52	LITHONIA LIGHTING	2GTL 4 48L EZ1 LP835	GTL 2X4, LENS 3500K	2GTL_4_48L_ EZ1_LP835.ies	4815	46.85

Cuschieri Horton Architects
1475 S. Bascom Ave, Suite 204
Campbell, California 95008
408.371.8200 Fx 408.371.8201

ACIES ENGINEERING
3371 Olcott Street
Santa Clara, CA 95054
ph: (408) 522-5255
fx: (408) 522-5260
info@acies.net

Copyright © 2019

REGISTERED PROFESSIONAL ENGINEER NAE15130 06/30/20 ELECTRICAL STATE OF CALIFORNIA

CEILING RCP PLAN – PHOTOMETRICS (ENGINEERING BUILDING REMODELING)

TOWN OF LOS GATOS
ENGINEERING BUILDING TI ~~AND STORAGE BUILDING~~
41 MILES AVENUE,
LOS GATOS, CA 95030

REVISIONS

NO.	ITEM	DATE
1	RESPONSE TO FIRST REVIEW COMMENTS	6/4/20

PERMIT #:

SUBMITTAL:
CITY SUBMITTAL SET

DRAWN BY:
CHECKED BY:

JOB NO: 1826
DATE: 12/04/19

SHEET NO. E5.1 1

7/23/2020 2:35 PM

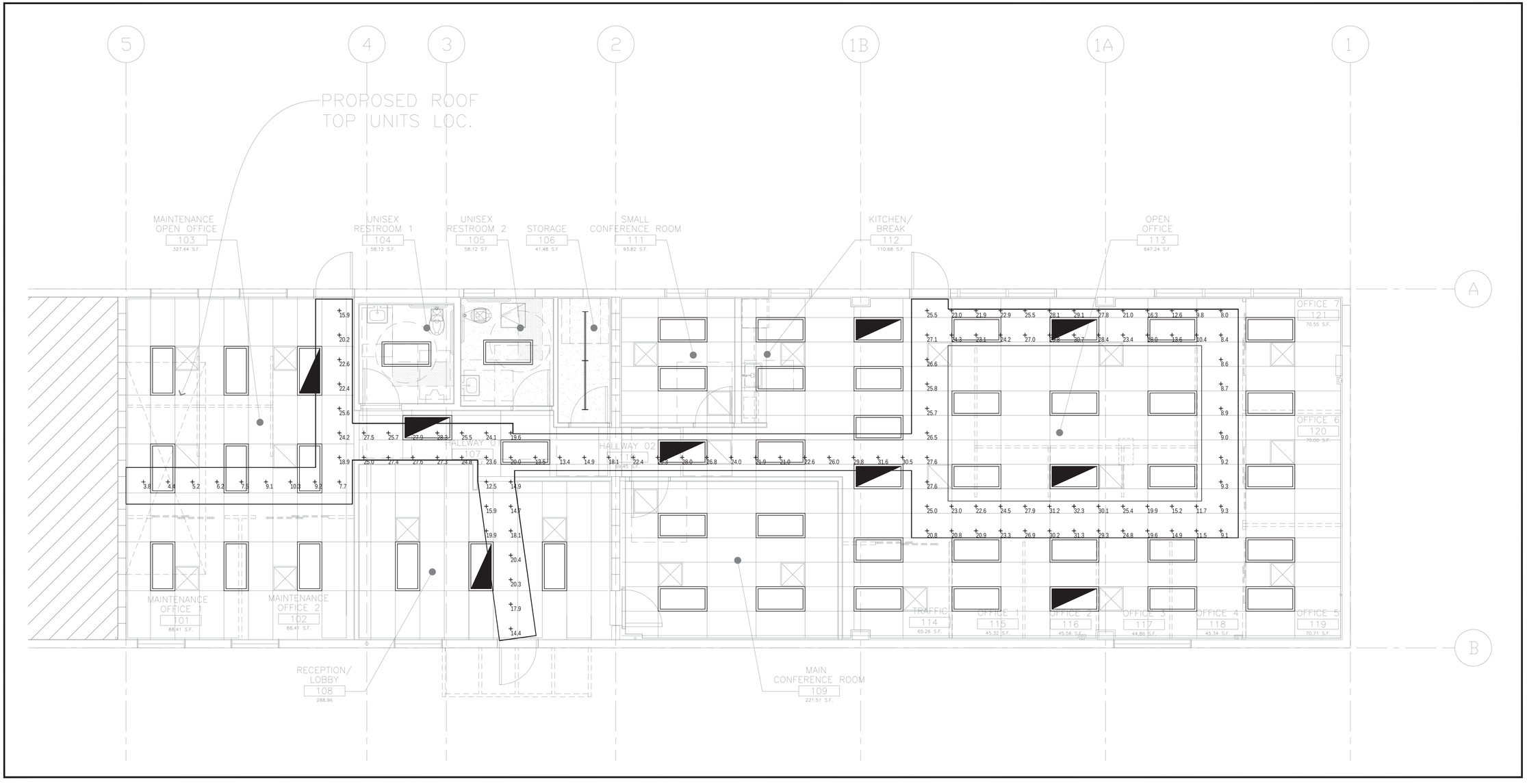

1	CEILING RCP PLAN - PHOTOMETRICS	SCALE: 1/4" = 1'-0"

STATISTICS

Description	Symbol	Avg	Max	Min	Max/Min	Avg/Min
Calc Zone #1	+	20.5 fc	32.3 fc	3.8 fc	8.5:1 fc	5.4:1 fc

LIGHTING FIXTURE SCHEDULE

Type	Symbol	Quantity	Manufacturer / Catalog #	Catalog number	Description	Filename	Lumens Per Lamp	Wattage
AE		9	LITHONIA LIGHTING	2GTL 4 48L EZ1 LP835	GTL 2X4, LENS 3500K	2GTL_4_48L_EZ1_LP835.ies	4815	46.85

Cuschieri Horton Architects
1475 S. Bascom Ave, Suite 204
Campbell, California 95008
408.371.8200 Fx 408.371.8201

ACIES ENGINEERING
3371 Olcott Street
Santa Clara, CA 95054
ph: (408) 522-5255
fx: (408) 522-5260
info@acies.net

Copyright © 2019

REGISTERED PROFESSIONAL ENGINEER
NAE15130
06/30/20
ELECTRICAL
STATE OF CALIFORNIA

CEILING RCP PLAN – PHOTOMETRICS EGRESS PATH (ENG. BLDG REMODELING)

TOWN OF LOS GATOS
ENGINEERING BUILDING TI ~~AND STORAGE~~ BUILDING
41 MILES AVENUE,
LOS GATOS, CA 95030

REVISIONS

NO.	ITEM	DATE
1	RESPONSE TO FIRST REVIEW COMMENTS	6/4/20

PERMIT #:

SUBMITTAL:
CITY SUBMITTAL SET

DRAWN BY:
CHECKED BY:

JOB NO: 1826
DATE: 12/04/19

SHEET NO.
E5.2
1

7/23/2020 2:35 PM