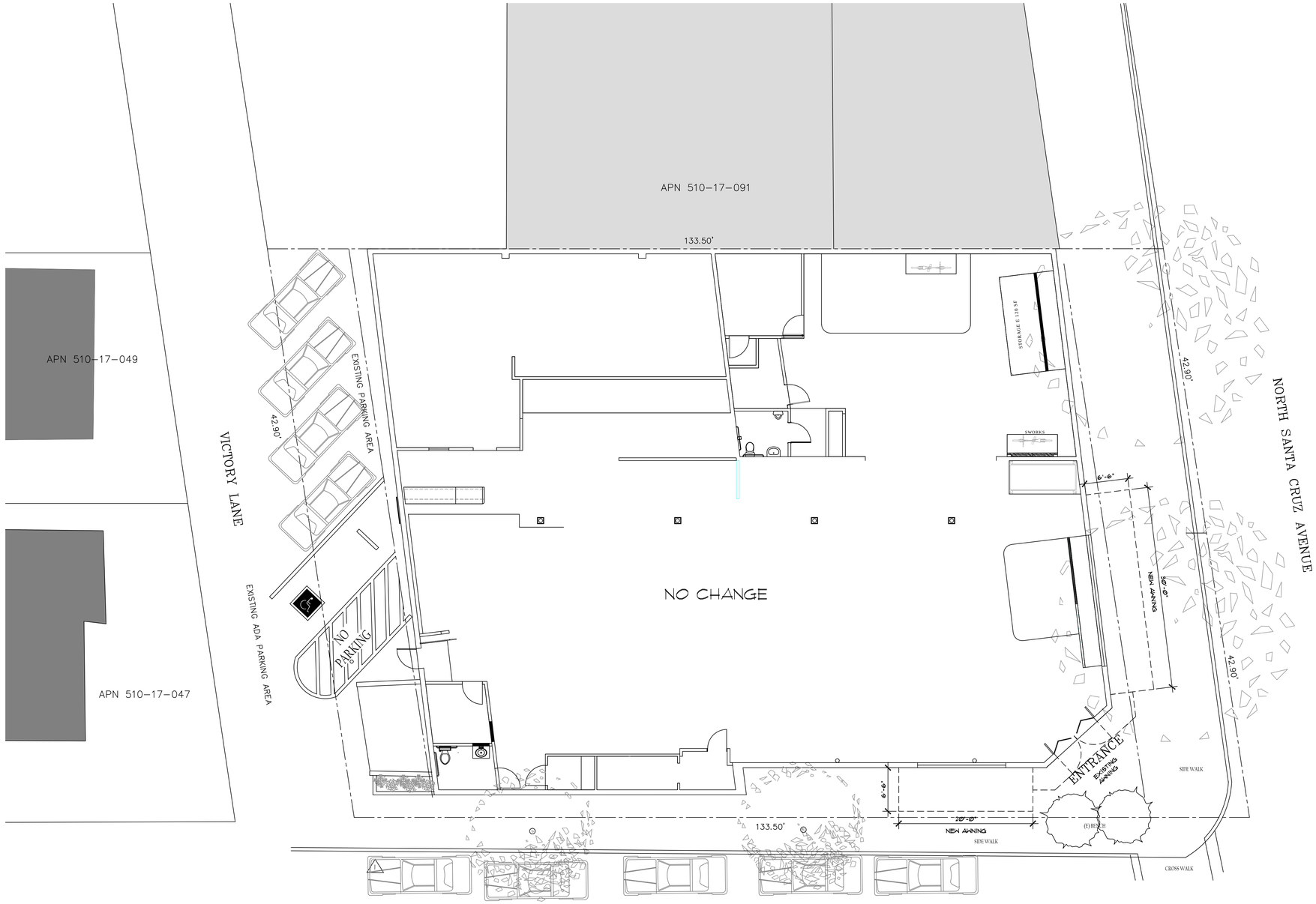

SITE PLAN

SCALE: 1/8"=1'-0"

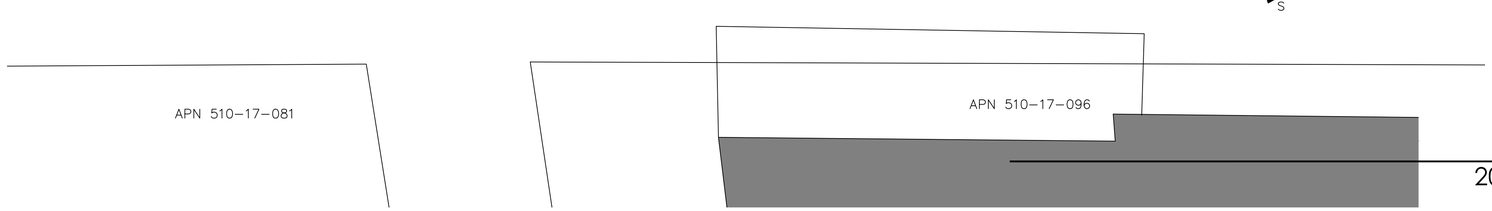

LOCATION MAP

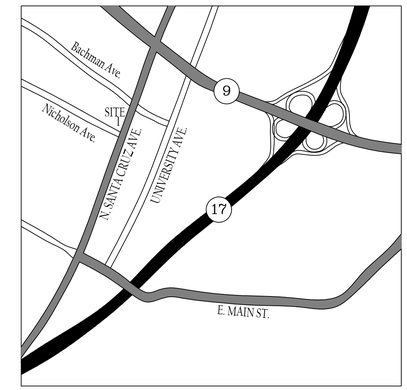

Mike's Bikes Los Gatos

PROJECT DATA
A.P.N. 510-17-046
ADDRESS: 201 N. Santa Cruz Ave. Los Gatos, CA
LEASED BY: Ken Martin

SCOPE OF WORK:

-NEW AWNING & SIGN ALONG SANTA CRUZ AVE AND NICHOLSON AVE.

APPLICABLE CODES

A- CALIFORNIA FIRE CODE	(UFC)	2013 EDITION
B- CONSTRUCTION SITE FIRE SAFETY	(CFC)	CHAPTER 33
C- FIRE DEPARTMENT SANTA CLARA COUNTY		SPEC. 61-1
C- CALIFORNIA BUILDING CODE	(UBC)	2013 EDITION
D- CALIFORNIA PLUMBING CODE	(UPC)	2013 EDITION
E- CALIFORNIA ELECTRIC CODE	(NEC)	2013 EDITION
F- CALIFORNIA ENERGY CODE		2013 EDITION
G- ANY OTHER APPLICABLE LOCAL AND STATE LAWS AND REGULATIONS.		

DRAWING INDEX:

A1 SITE/FLOOR PLAN, PROJECT DATA, SCOPE OF WORK
A2 EXTERIOR ELEVATIONS AND PICTURES
A3 AWNING DETAILS

SEPTEMBER 12, 2016

LICENSED ARCHITECT
AKIRA STEVAN PATRICK
No. C-17920
RENEWAL DATE
8/31/17
STATE OF CALIFORNIA

A1

Mike's Bike
201 N. Santa Cruz Ave, Los Gatos, California

THE MIDGLEN STUDIO
WILLIAM ARTHUR PATRICK, AIA
taliesin fellow
AKIRA STEVAN PATRICK, AIA
ARCHITECTS
LICENSE C4940/ C17920
831 MIDGLEN WAY
WOODSIDE, CA 94062
650/ 369-0416 FAX 369-0417

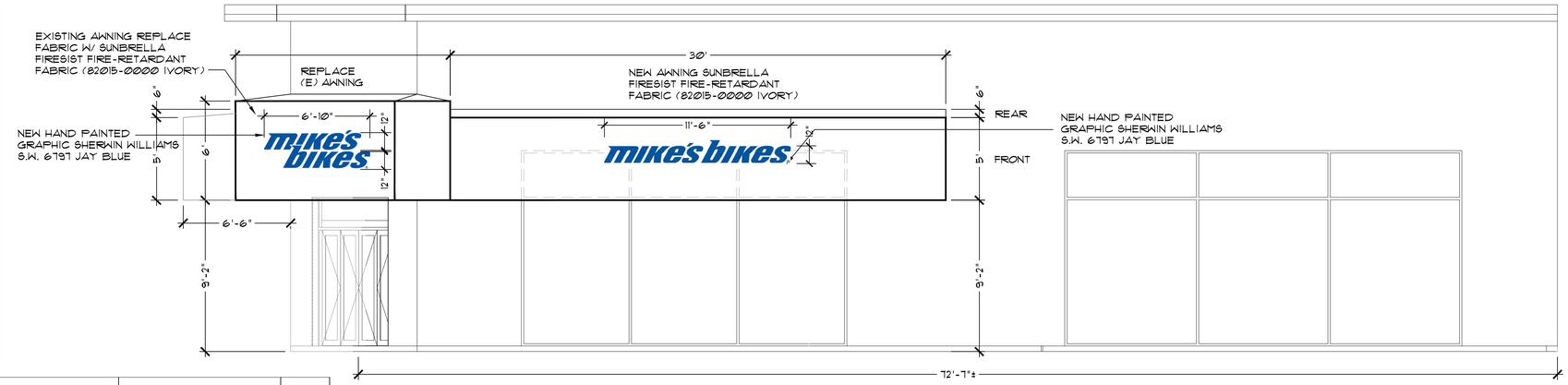

PROPOSED SANTA CRUZ AVE ELEVATION

SCALE: 1/4"=1'-0"

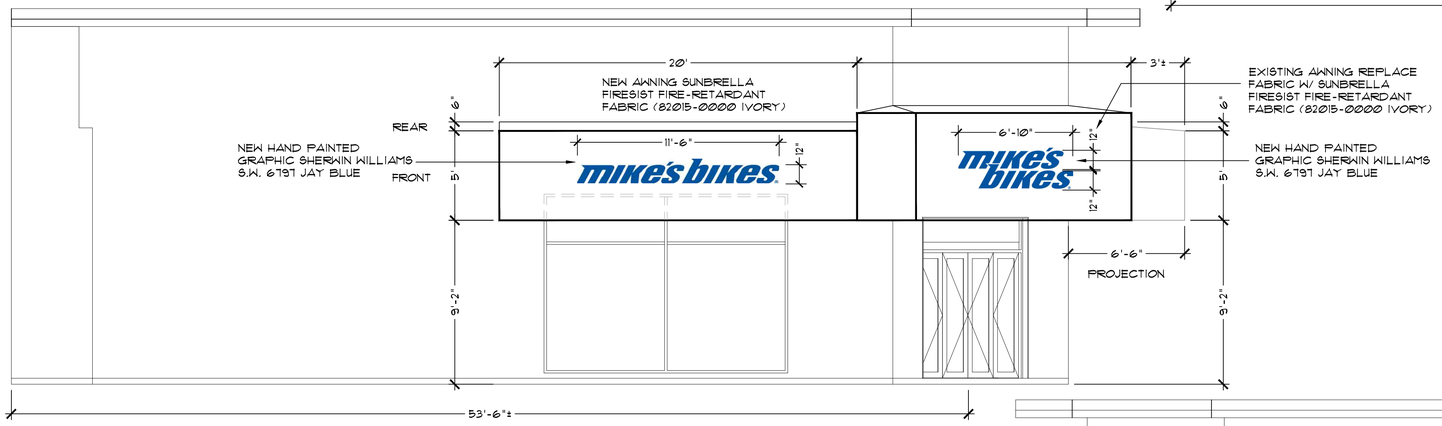

PROPOSED NICHOLSON AVE ELEVATION

SCALE: 1/4"=1'-0"

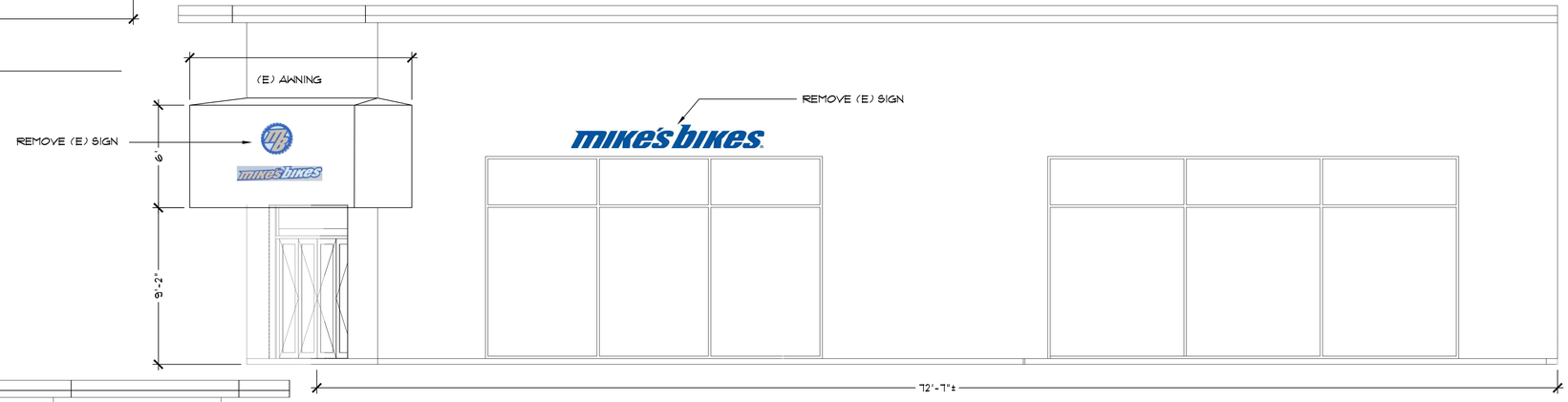

EXISTING SANTA CRUZ AVE ELEVATION

SCALE: 1/4"=1'-0"

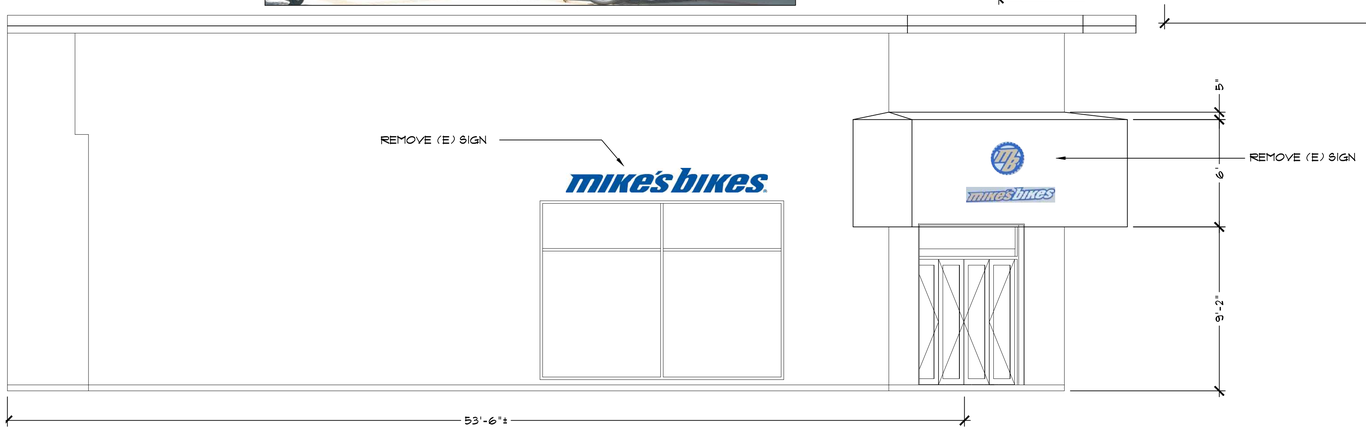

EXISTING NICHOLSON AVE ELEVATION

SCALE: 1/4"=1'-0"

SEPTEMBER 12, 2016

LICENSED ARCHITECT
AKIRA STEVAN PATRICK
No. C-17920
RENEWAL DATE
8/31/17
STATE OF CALIFORNIA

A2

Mike's Bike

201 N. Santa Cruz Ave, Los Gatos, California

THE MIDGLEN STUDIO

WILLIAM ARTHUR PATRICK, AIA
taliesin fellow
AKIRA STEVAN PATRICK, AIA
ARCHITECTS
LICENSE C4940/ C17920

831 MIDGLEN WAY
WOODSIDE, CA 94062
650/ 369-0416 FAX 369-0417

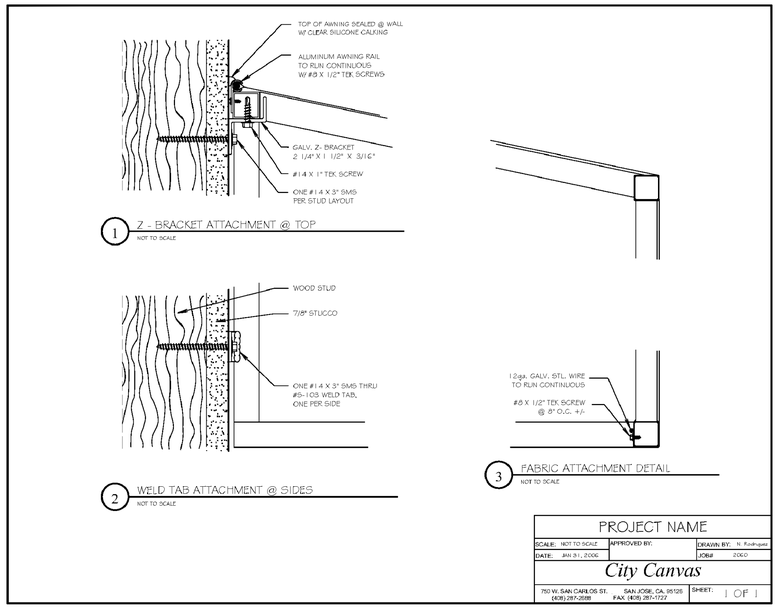

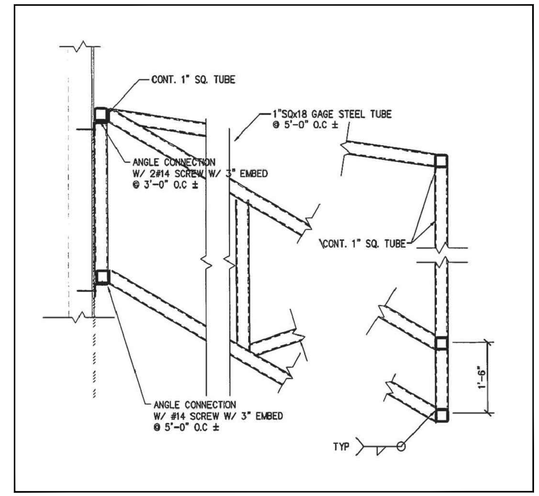

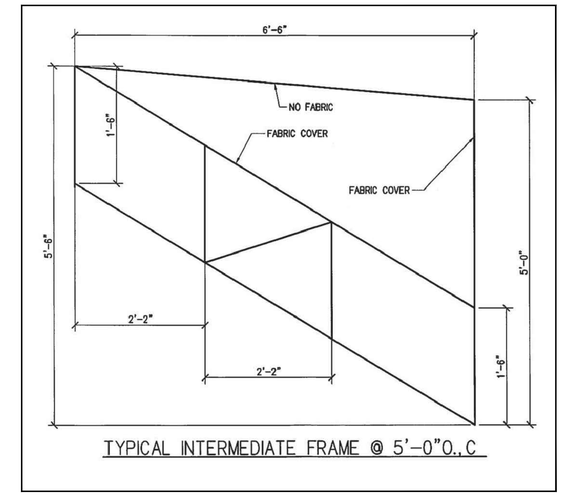

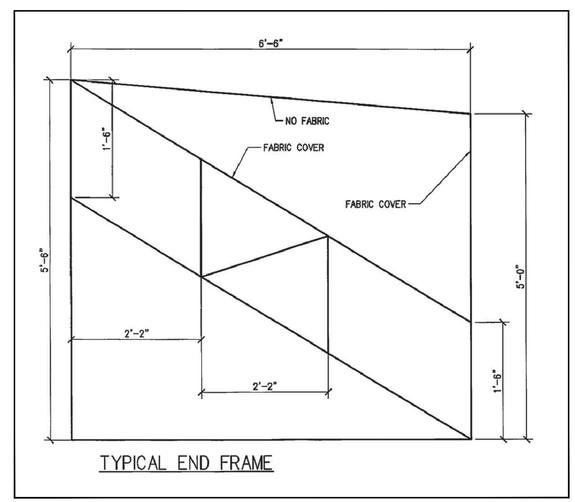

SEPTEMBER 12, 2016

LICENSED ARCHITECT
AKIRA STEVAN PATRICK
No. C-17920
RENEWAL DATE
8/31/17
STATE OF CALIFORNIA

A3

Mike's Bike

201 N. Santa Cruz Ave, Los Gatos, California

THE MIDGLEN STUDIO

WILLIAM ARTHUR PATRICK, AIA
taliesin fellow
AKIRA STEVAN PATRICK, AIA
ARCHITECTS
LICENSE C4940/ C17920

831 MIDGLEN WAY
WOODSIDE, CA 94062
650/ 369-0416 FAX 369-0417